TBI TRANSFORMER BOBBIN INDUSTRIAL CO.,LTD.
Tel : 86-769-88789999 Fax : 86-769-88789989
http:// tbi-tw.com e-mail : tb6688@ms46.hinet.net

REVISIONS				
REV	SYM	DRAFTER	CHECKER	DATE
1		YAN.TANG	G.F.YANG	08/20/10
2				
3				

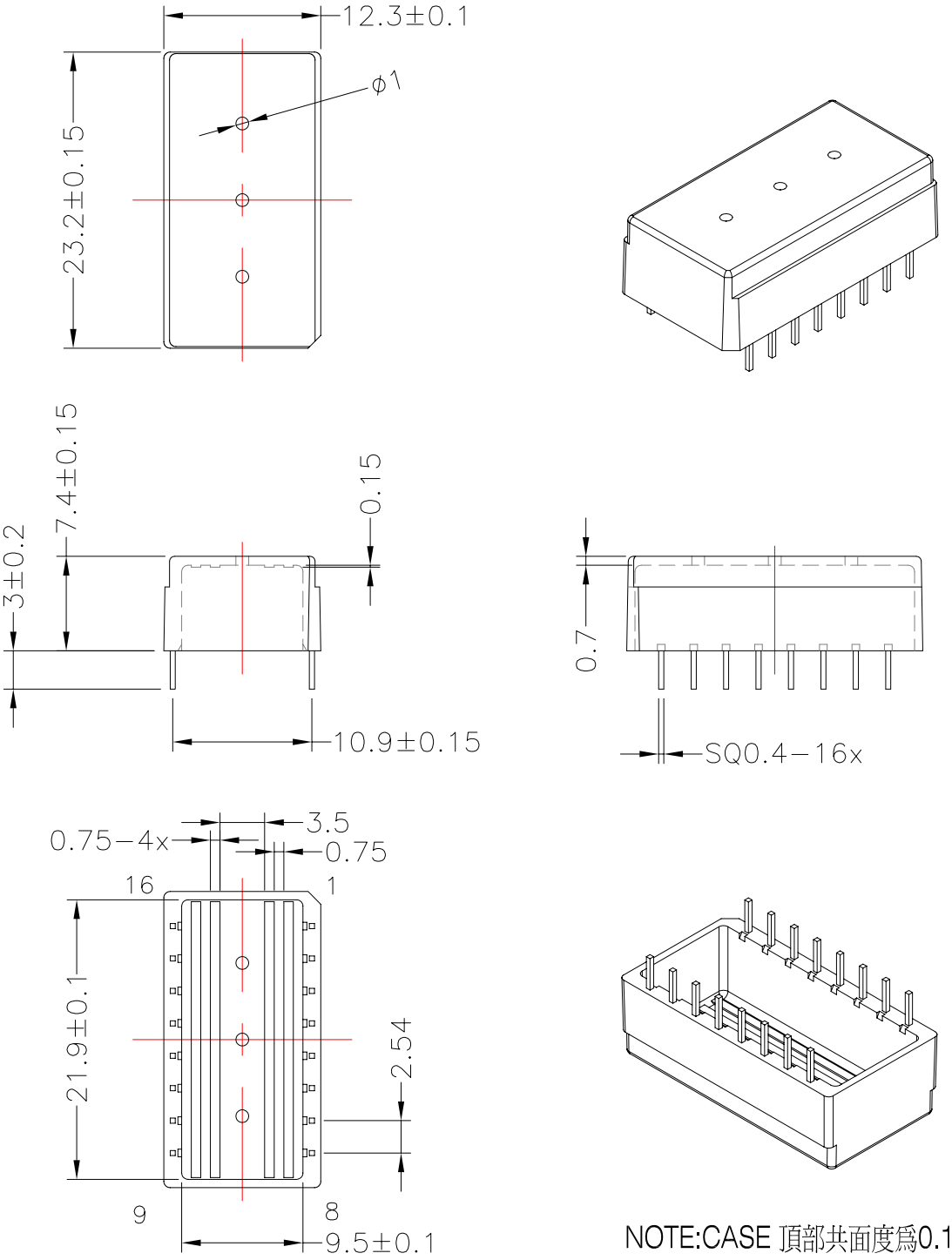

NOTE:CASE 頂部共面度爲0.10 MAX.

DWG NO.	K30SS-16P-TH-2.54-C-11				
PART NO.	MATERIAL (BOBBIN)	MATERIAL (TERMINAL)	TERMINAL (PLATING)	PIN ALLOCATION	NOTE
TBI-218-15031.1103	PM-9630	PB C5191	Sn	ALL PIN	
					H

TOLERANCE : .X ±0.15 .XX ±0.10 .XXX ±0.05 UNIT : m / m SCALE 2 : 1

Finish:
1. PB wire Immersion Sn on terminal : Thickness:Sn plating,100,5 μm (200 μinches) min,Base nickel 0.625 μm (25 μ inches) min.
2. CP wire Immersion Sn on terminal : Thickness:Sn plating,100,5 μm (200 μinches) min.
3. Coplanarity deviation: 0.10 mm (0.004 inches)max.

REV 1