TBI TRANSFORMER BOBBIN INDUSTRIAL CO.,LTD.
Tel : 86-769-88789999 Fax : 86-769-88789989
http:// tbi-tw.com e-mail : tb6688@ms46.hinet.net

REVISIONS

REV	SYM	DRAFTER	CHECKER	DATE
2		Y.G.HSU	W.H.HSU	03/17/07
3		YAN.TANG	W.H.HSU	09/22/07
4		YAN.TANG	W.H.HSU	12/24/09

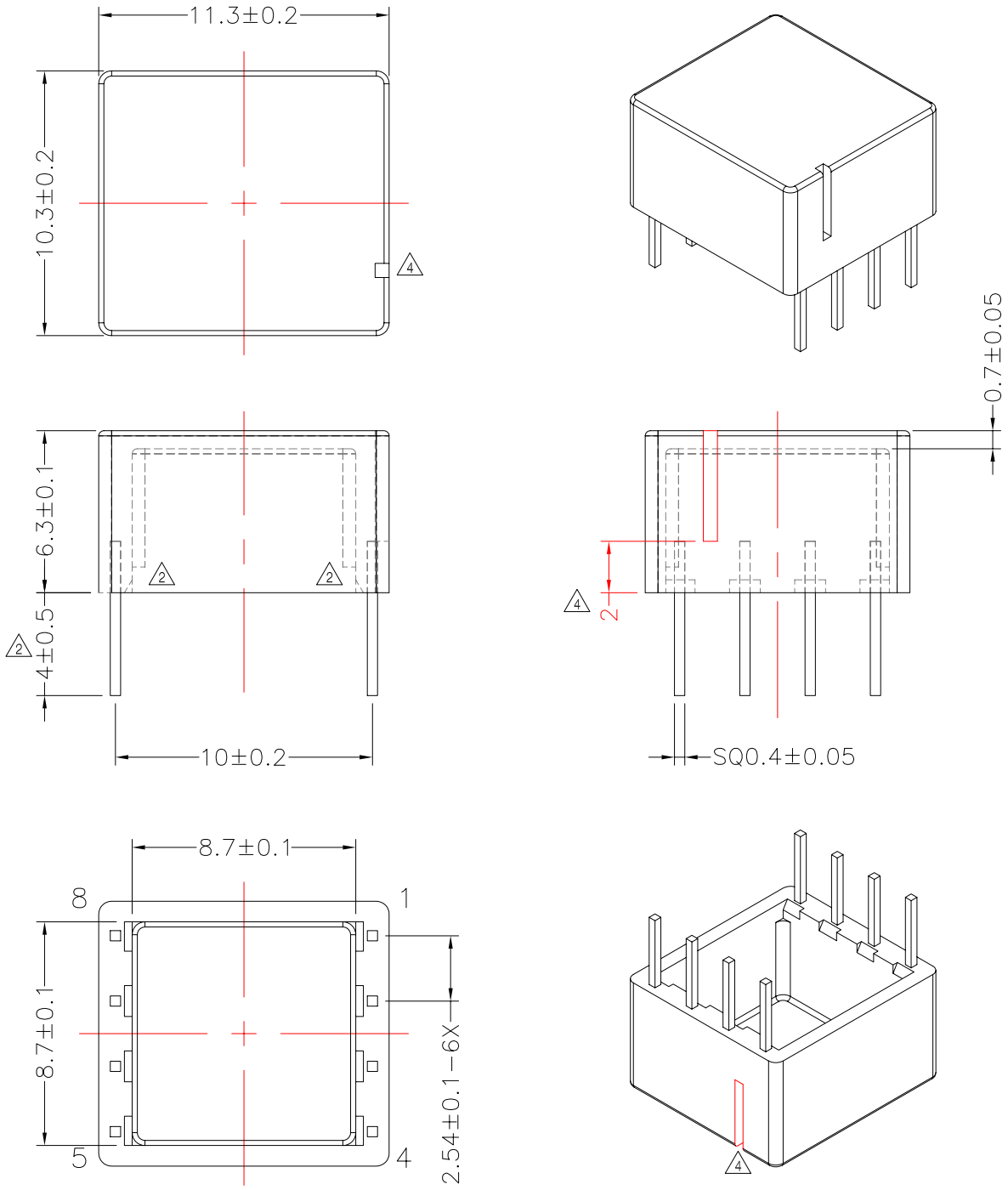

2 NOTE:Pull Strenght 1.0kg (min)

DWG NO.	TR10-8P-TH-2.54-A-1				
PART NO.	MATERIAL (BOBBIN)	MATERIAL (TERMINAL)	TERMINAL (PLATING)	PIN ALLOCATION	NOTE
TBI-218-14011.103	PM-9630	P.B	Sn	ALL PIN	
TBI-218-14011.113	PM-9630	P.B	Sn	CUT PIN#2,3,6,7	

TOLERANCE: .X±0.15 .XX±0.10 .XXX±0.05 | UNIT : m / m | SCALE 4 : 1

Finish:
1. Pb wire Immersion Sn on terminal : Thickness:Sn plating,100,5 μm (200 μ inches) min,Base nickel 0.625 μm (25 μ inches) min.
2. CP wire Immersion Sn on terminal : Thickness:Sn plating,100,5 μm (200 μ inches) min.
3. Coplanarity deviation: 0.10 mm (0.004 inches)max.

REV 4