TBI TRANSFORMER BOBBIN INDUSTRIAL CO.,LTD.
Tel : 86-769-88789999 Fax : 86-769-88789989
http:// tbi-tw.com e-mail : tb6688@ms46.hinet.net

REVISIONS				
REV	SYM	DRAFTER	CHECKER	DATE
2		H.X.DUAN	G.F.YANG	11/23/12
3				
4				

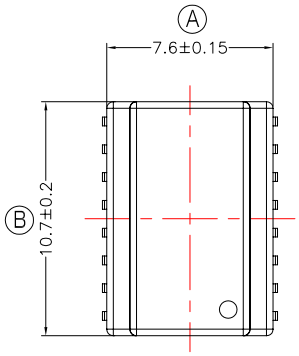

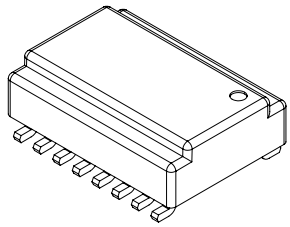

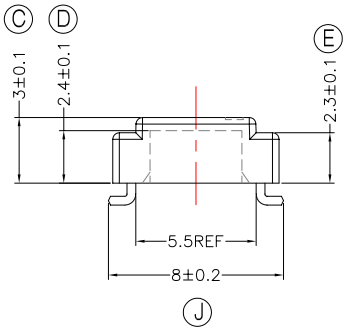

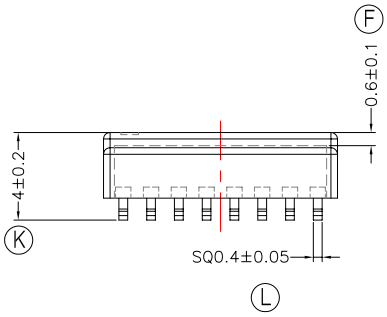

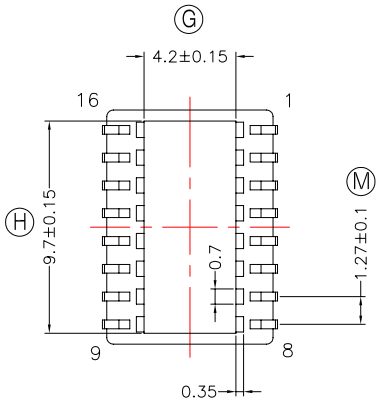

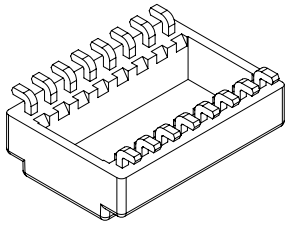

NOTE:CASE 頂部共面度爲0.10 MAX.

DWG NO.	H11X7-16P-L-1.27-C-11					
PART NO.	MATERIAL (BOBBIN)	MATERIAL (TERMINAL)	TERMINAL (PLATING)	PIN ALLOCATION	NOTE	
TBI-113-41031.1103	PM-9630(BK)	PB	Sn	ALL PIN	53GH11X716P1	S
						H
	TOLERANCE: .X±0.15 .XX±0.10 .XXX±0.05			UNIT : m / m	SCALE 1 : 1	

Finish: 1. PB wire Immersion Sn on terminal : Thickness:Sn plating,100,5-12.5 μm (200-500 μ inches) min,Base nickel 1.25-2.5 μm (50-100 μ inches) min.
2. CP wire Immersion Sn on terminal : Thickness:Sn plating,100,5-12.5 μm (200-500 μ inches) min.
3. Coplanarity deviation: 0.08 mm (0.003 inches)max.

REV 1