TBI TRANSFORMER BOBBIN INDUSTRIAL CO.,LTD.
Tel : 86-769-88789999 Fax : 86-769-88789989
http:// tbi-tw.com e-mail : tb6688@ms46.hinet.net

REVISIONS				
REV	SYM	DRAFTER	CHECKER	DATE
1		X.H.GU	G.F.YANG	06/08/12
2				
3				

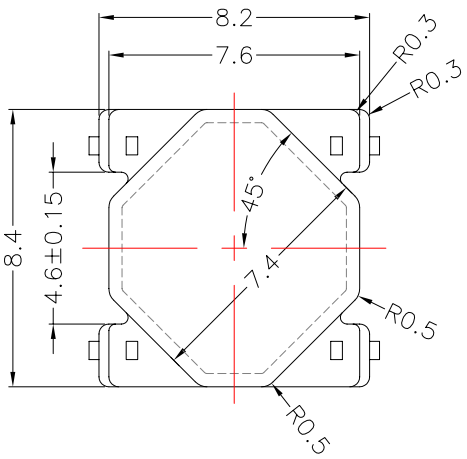

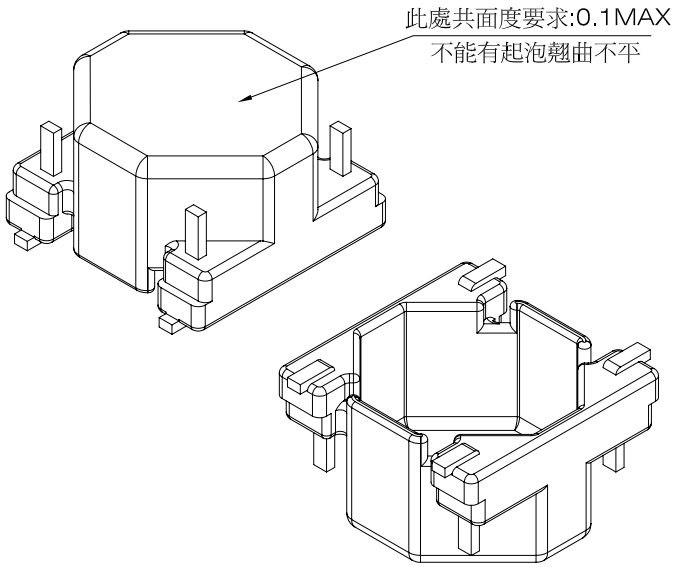

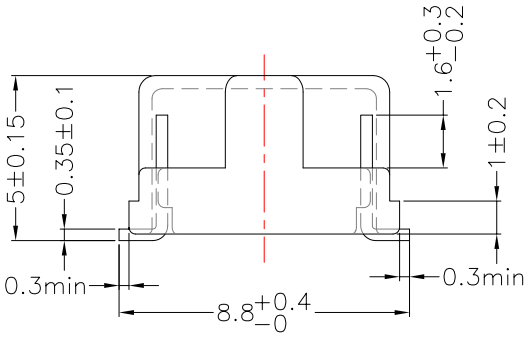

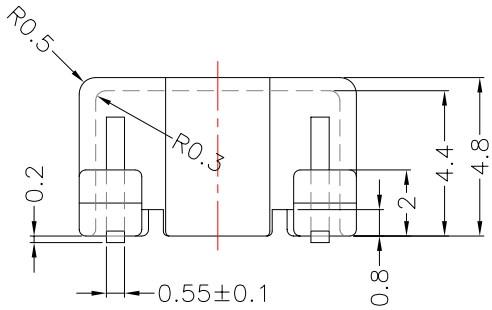

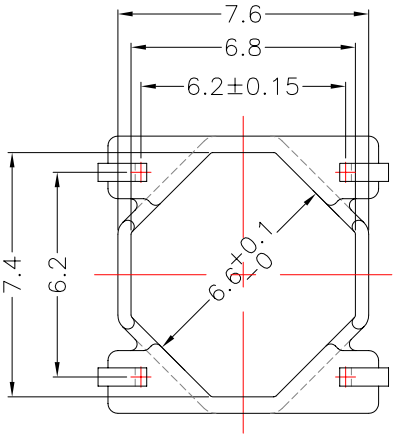

Note:

1.一般公差:±0.1mm.
2.未註明R角者:R=0.2mm.
3.PIN拉力要求:1.1Kg min.
4.PIN共面度要求:0.1max.
5.錫錫厚度要求:2.0 um min.

實際用線材規格爲: CP 0.6*0.4

DWG NO.	2129-4P-L-D-11					
PART NO.	MATERIAL (BOBBIN)	MATERIAL (TERMINAL)	TERMINAL (PLATING)	PIN ALLOCATION	NOTE	
TBI-113-20041.1106	PM-9630	錫銅合金(CP)	Sn	ALL PIN		H
	TOLERANCE: ±0.1			UNIT : m / m	SCALE 1 : 1	

Finish: 1. PB wire Immersion Sn on terminal : Thickness:Sn plating,100,5 μm (200 μ inches) min,Base nickel 0.625 μm (25 μ inches) min.
2. CP wire Immersion Sn on terminal : Thickness:Sn plating,100,5 μm (200 μ inches) min.
3. Coplanarity deviation: 0.10 mm (0.004 inches)max.

REV 1