TBI TRANSFORMER BOBBIN INDUSTRIAL CO.,LTD.
Tel : 86-769-88789999 Fax : 86-769-88789989
http:// tbi-tw.com e-mail : tb6688@ms46.hinet.net

REVISIONS				
REV	SYM	DRAFTER	CHECKER	DATE
1		X.H.GU	G.F.YANG	10/25/13
2				
3				

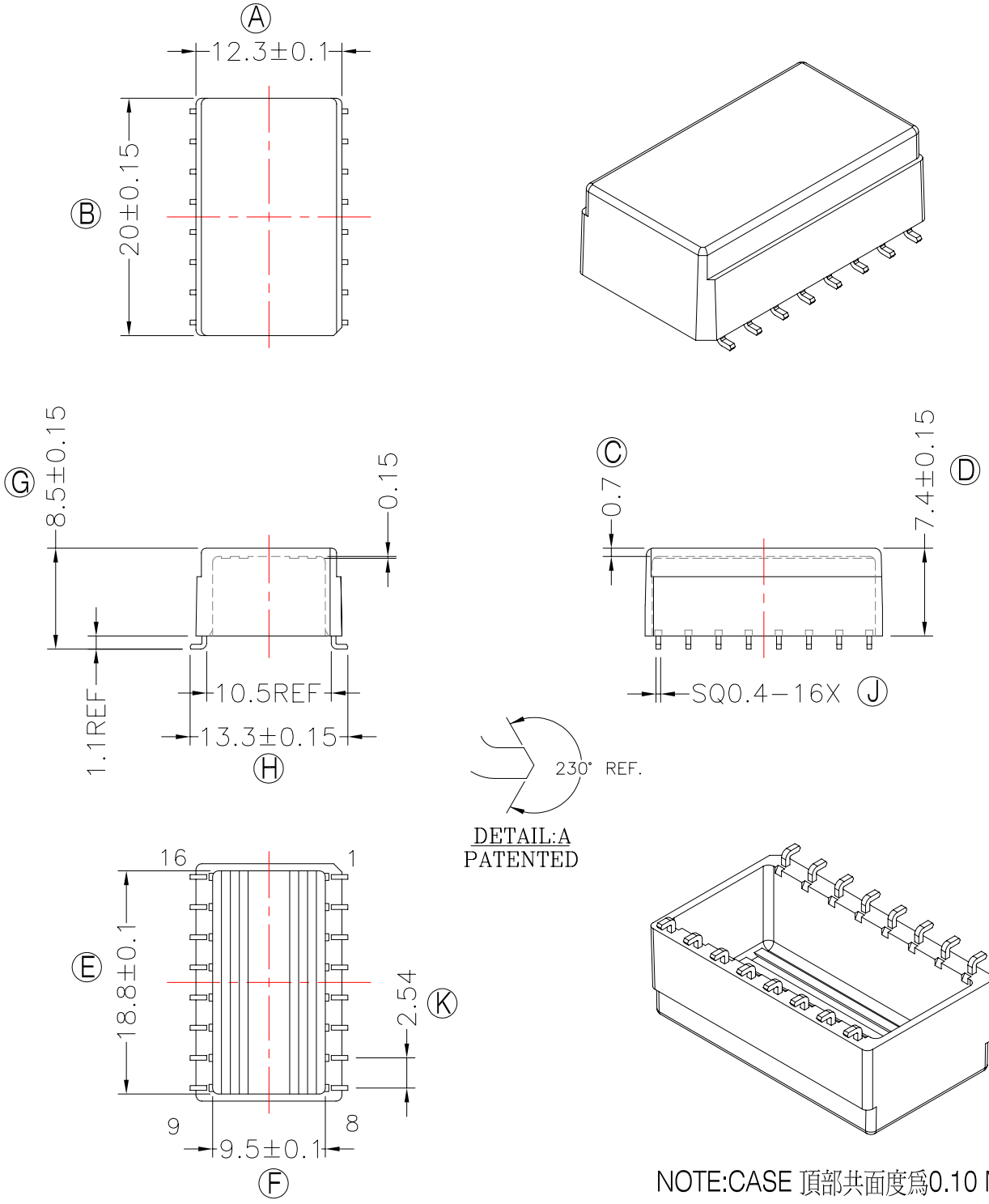

NOTE:CASE 頂部共面度爲0.10 MAX.

DWG NO.	K30SS-16P-L-2.54-B1-11					
PART NO.	MATERIAL (BOBBIN)	MATERIAL (TERMINAL)	TERMINAL (PLATING)	PIN ALLOCATION	NOTE	
TBI-113-17211.1103	PM-9630	P.B C5191	Sn	ALL PIN	53GK30SS0001	S
	TOLERANCE: 0<L<=4:±0.1 4<L<=16:±0.2 16<L<=63:±0.3			UNIT : m / m	SCALE 1 : 1	

Finish:
1. PB wire Immersion Sn on terminal : Thickness:Sn plating,100,5 μm (200 μ inches) min,Base nickel 0.625 μm (25 μ inches) min.
2. CP wire Immersion Sn on terminal : Thickness:Sn plating,100,5 μm (200 μ inches) min.
3. Coplanarity deviation: 0.10 mm (0.004 inches)max.

REV 1