TBI TRANSFORMER BOBBIN INDUSTRIAL CO.,LTD.
Tel : 86-769-88789999 Fax : 86-769-88789989
http:// tbi-tw.com e-mail : tb6688@ms46.hinet.net

REVISIONS

| REV | SYM | DRAFTER | CHECKER | DATE |
|---|---|---|---|---|
| 1 | | X.X.YUAN | G.F.YANG | 10/15/15 |
| 2 | | M.FANG | G.F.YANG | 11/17/15 |
| 3 | | | | |

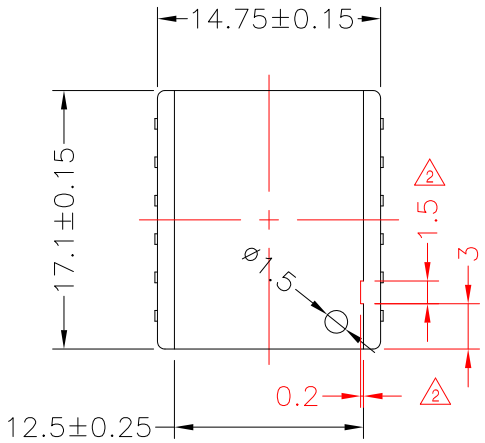


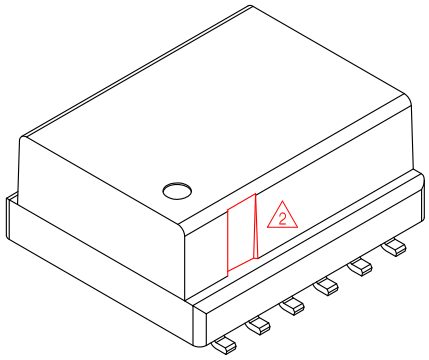

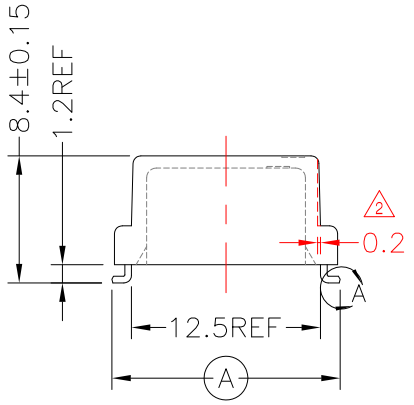


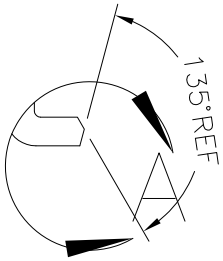


DETAIL:A
PATENTED

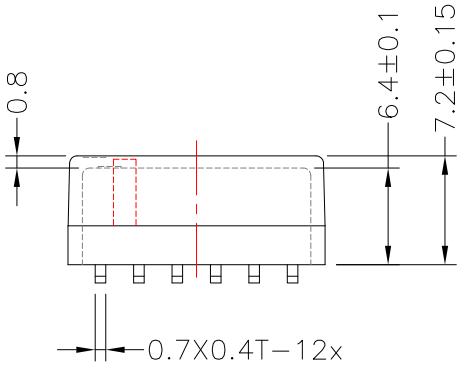


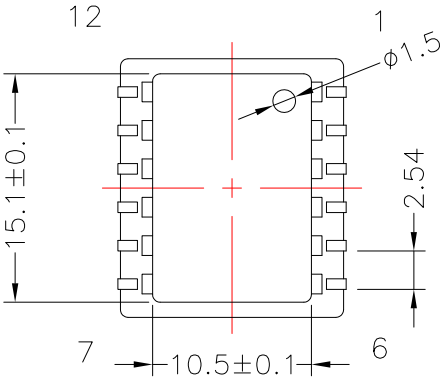


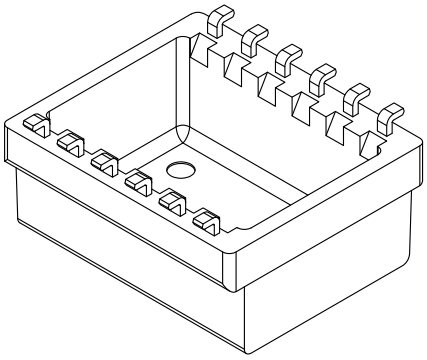

NOTE:CASE 頂部共面度為0.10 MAX.

| DWG NO. | CU-12P-L-2.54-D-22 | | | | | |
|---|---|---|---|---|---|---|
| PART NO. | MATERIAL (BOBBIN) | MATERIAL (TERMINAL) | TERMINAL (PLATING) | PIN ALLOCATION | NOTE | |
| TBI-113-10041.2203 | WH-9100 BK | PB C5191 | Sn | ALL PIN Ⓐ =15.1±0.15 | | |
| TBI-113-10041.2213 | WH-9100 BK | PB C5191 | Sn | ALL PIN Ⓐ =15.24±0.15 | | H |
| | | | | | | |
| | | | | | | |
| | | | | | | |
| | | | | | | |

TOLERANCE: .X±0.15 .XX±0.10 .XXX±0.05 | UNIT : m / m | SCALE 2 : 1

Finish: 1. Pb wire Immersion Sn on terminal : Thickness:Sn plating,100%,5 μm (200 μinches) min,Base nickel 0.625 μm (25 μ inches) min.
2. CP wire Immersion Sn on terminal : Thickness:Sn plating,100%,5 μm (200 μinches) min.
3. Coplanarity deviation: 0.10 mm (0.004 inches )max.

REV 2