TBI TRANSFORMER BOBBIN INDUSTRIAL CO.,LTD.
Phone 886-2-22929999 Fax 886-2-22925236
E-MAIL: tb6688@ms46.hinet.net

REVISIONS				
REV	SYM	DRAFTER	CHECKER	DATE
1		T.S.LII	W.H.HSU	07/14/00
2				
3				

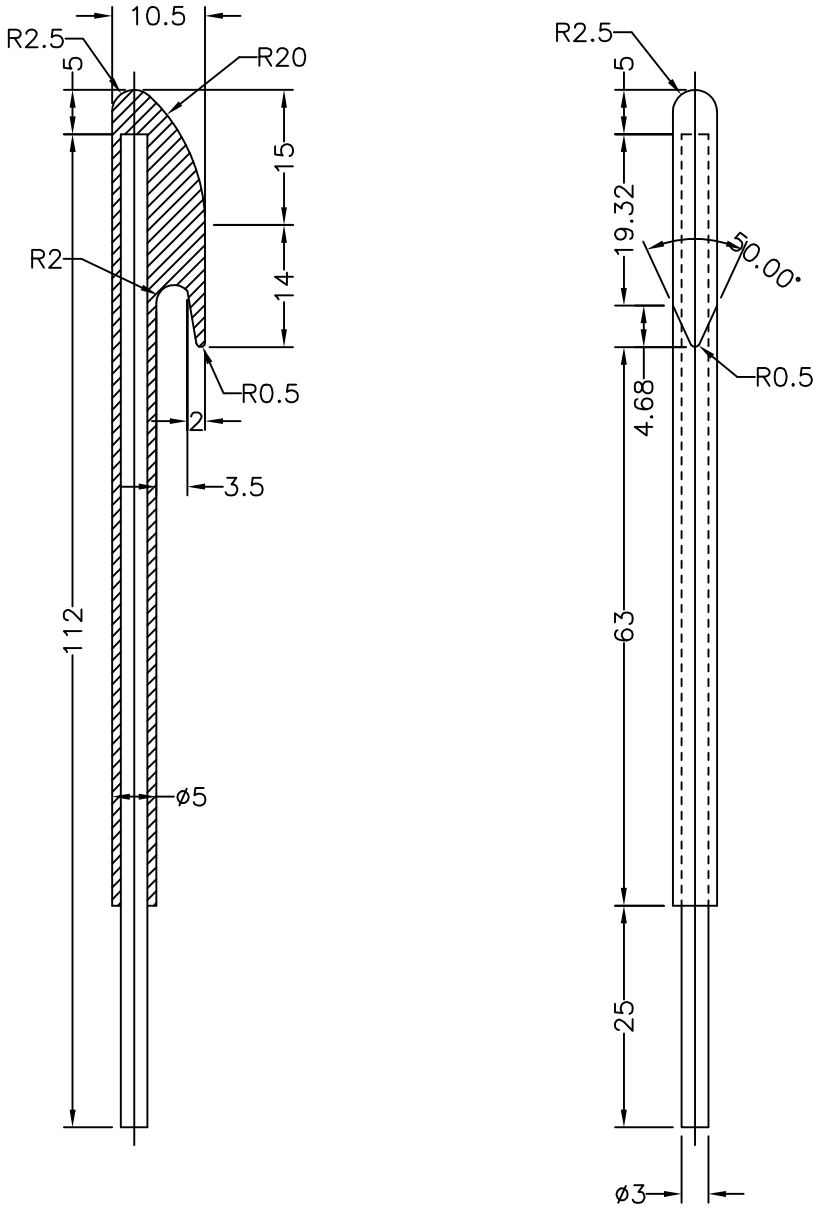

PART NO.	Hand Hook NO.5						
DWG NO.	TBI-521-05011.A0						
TBI NO.	MATERIAL						
521-05011.A0	POM			PART NO.	REV	MODE NO	PIN LOCATION
							TOLERANCE .X± .XX±
							UNIT m/m
							SCALE 1.2 : 1
							REV 1