TBI TRANSFORMER BOBBIN INDUSTRIAL CO.,LTD.
Tel : 86-769-88789999 Fax : 86-769-88789989
http:// tbi-tw.com e-mail : tb6688@ms46.hinet.net

REVISIONS				
REV	SYM	DRAFTER	CHECKER	DATE
1		X.H.GU	G.F.YANG	03/22/13
2				
3				

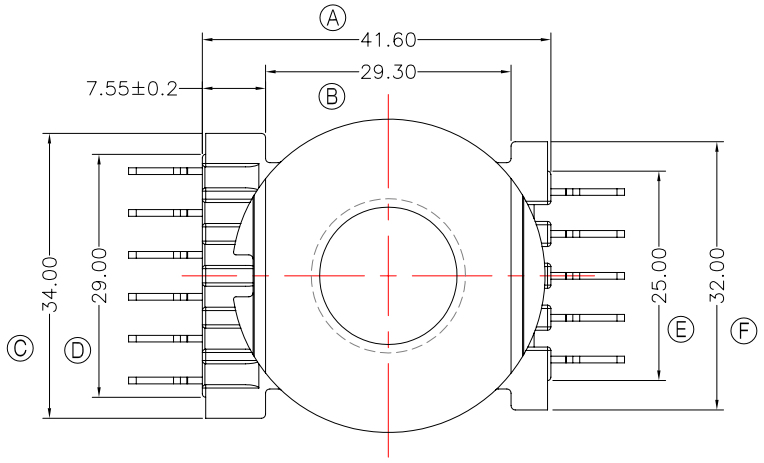

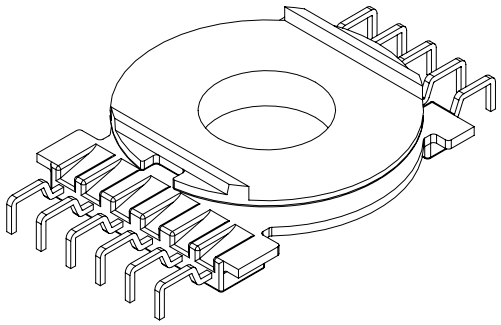

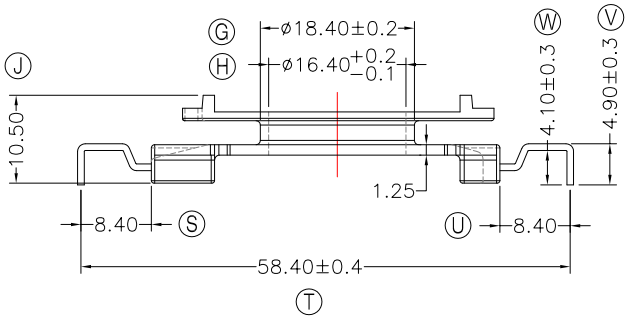

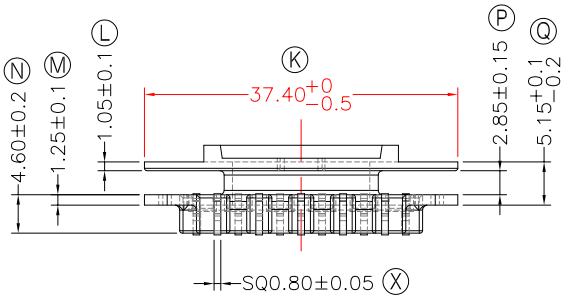

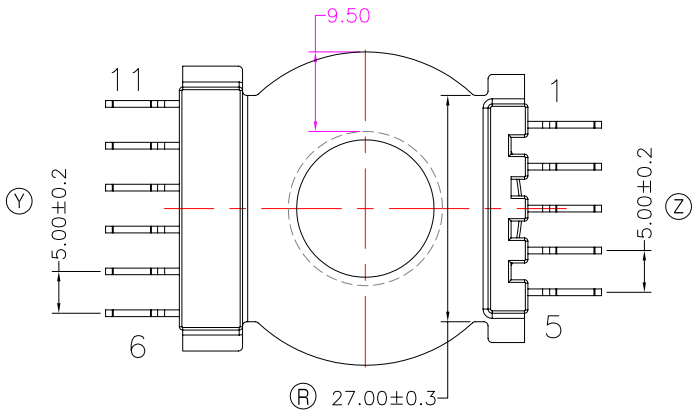

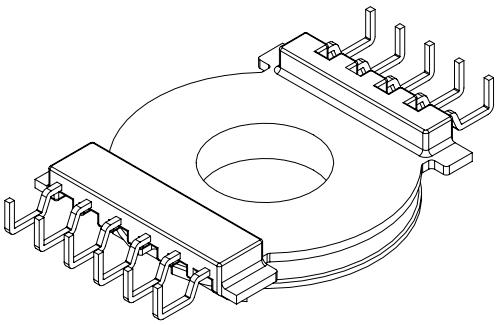

1.任意一點強度須1.5kg MIN;
2.焊錫前拉力:1.0KG MIN;焊錫後拉力:1.5KG MIN;
3.WINDING SPACE:2.85mm*9.5mm=27.075 mm²

DWG NO.	CC45-11.6-11P-THT-0A-12					
PART NO.	MATERIAL (BOBBIN)	MATERIAL (TERMINAL)	TERMINAL (PLATING)	PIN ALLOCATION	NOTE	
TBI-239-08011.1206	PM-9820	CP WIRE	Sn	ALL PIN		S

TOLERANCE: 0<L<=4:±0.1 4<L<=16:±0.2 16<L<=50:±0.3 PIN PITCH±0.2 | UNIT : m / m | SCALE 1 : 1

Finish:
1. PB wire Immersion Sn on terminal : Thickness:Sn plating,100,5 μm (200 μinches) min,Base nickel 0.625 μm (25 μ inches) min.
2. CP wire Immersion Sn on terminal : Thickness:Sn plating,100,5 μm (200 μinches) min.
3. Coplanarity deviation: 0.10 mm (0.004 inches)max.

REV 1