TBI TRANSFORMER BOBBIN INDUSTRIAL CO.,LTD.
Tel : 86-769-88789999 Fax : 86-769-88789989
http:// tbi-tw.com e-mail : tb6688@ms46.hinet.net

REVISIONS

REV	SYM	DRAFTER	CHECKER	DATE
5		X.H.GU	G.F.YANG	06/04/09
6		YAN.TANG	G.F.YANG	11/13/09
7		YAN.TANG	G.F.YANG	12/15/09

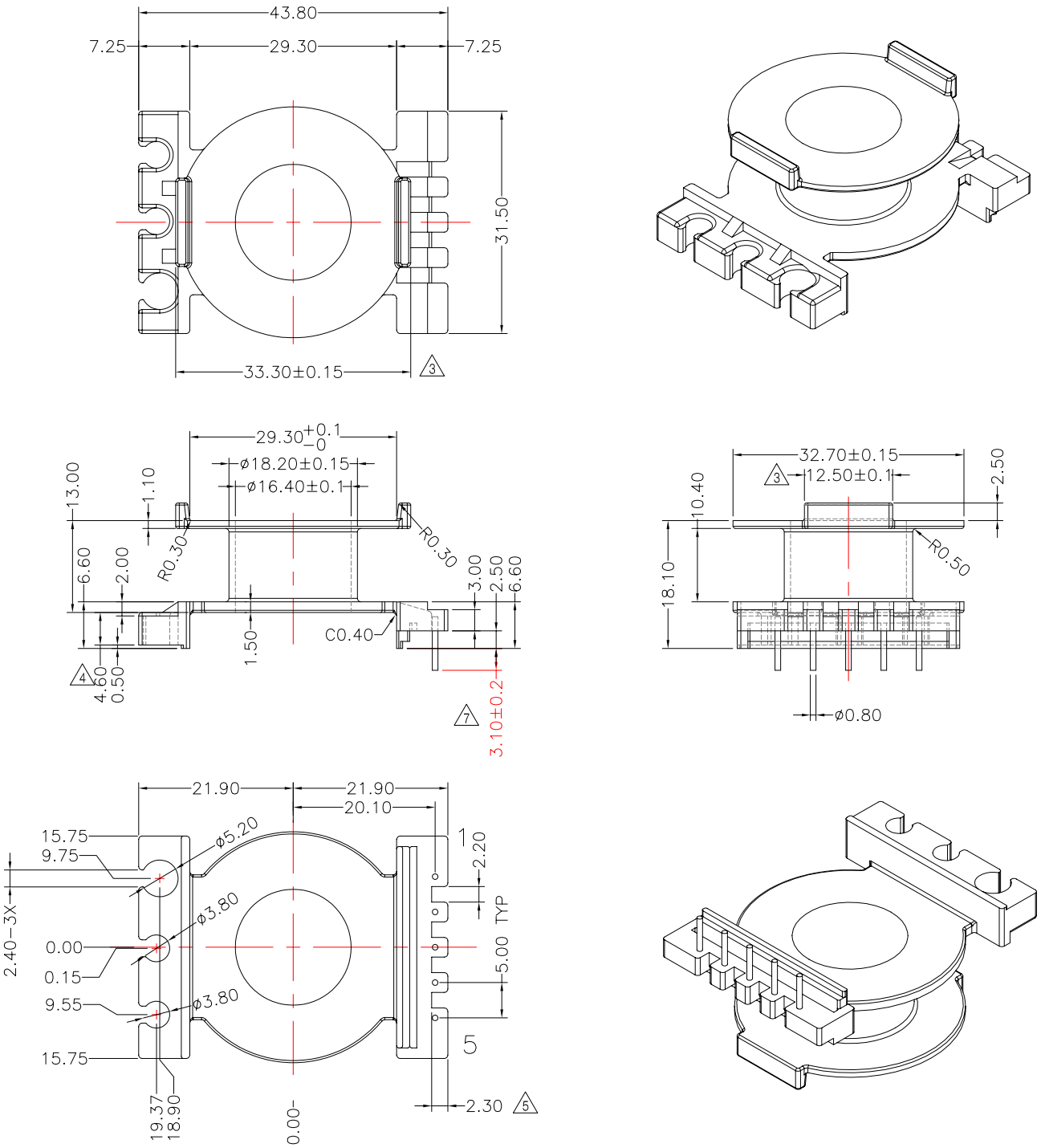

DWG NO.	CC40-21-5P-TH-5.0-D-12				
PART NO.	MATERIAL (BOBBIN)	MATERIAL (TERMINAL)	TERMINAL (PLATING)	PIN ALLOCATION	NOTE
TBI-239-01041.1206	PM-9820 6	CP WIRE	Sn	ALL PIN	

TOLERANCE: 0<L<=4:±0.1 4<L<=16:±0.2 16<L<=50:±0.3 PIN PITCH±0.2

UNIT : m / m

SCALE 1 : 1

Finish:
1. PB wire Immersion Sn on terminal : Thickness:Sn plating,100,5 μm (200 μinches) min,Base nickel 0.625 μm (25 μ inches) min.
2. CP wire Immersion Sn on terminal : Thickness:Sn plating,100,5 μm (200 μinches) min.
3. Coplanarity deviation: 0.10 mm (0.004 inches)max.

REV 7