TBI TRANSFORMER BOBBIN INDUSTRIAL CO.,LTD.
Tel : 86-769-88789999 Fax : 86-769-88789989
http:// tbi-tw.com e-mail : tb6688@ms46.hinet.net

REVISIONS				
REV	SYM	DRAFTER	CHECKER	DATE
4		X.H.GU	G.F.YANG	04/11/14
5		X.H.GU	G.F.YANG	05/08/14
6		X.H.GU	G.F.YANG	12/03/16

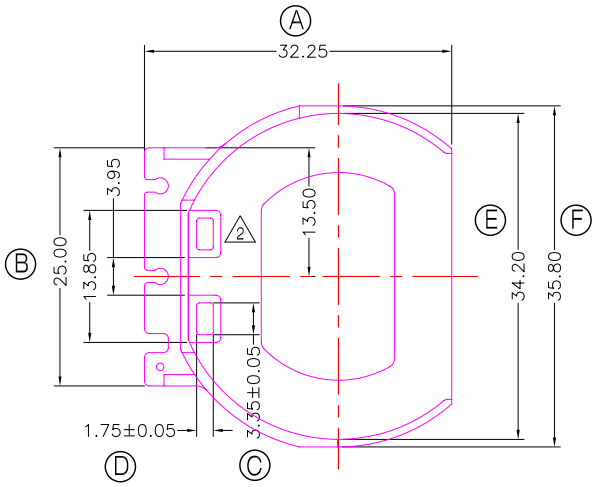

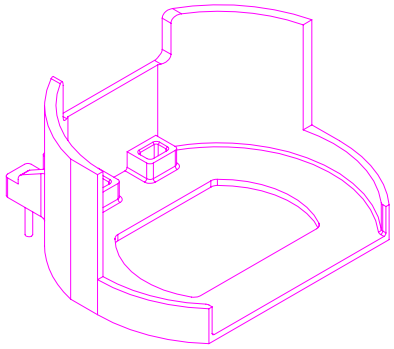

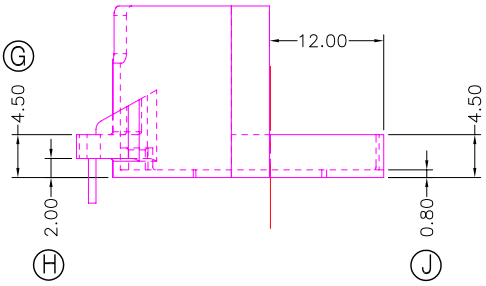

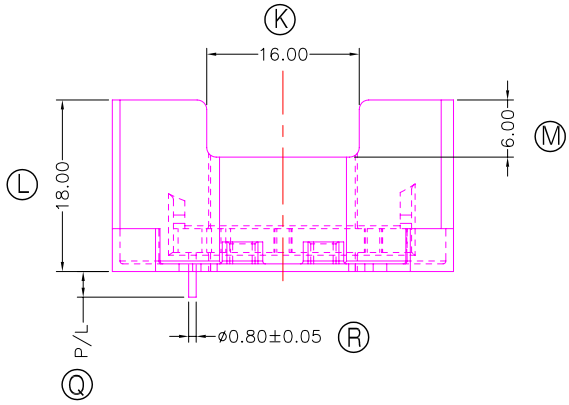

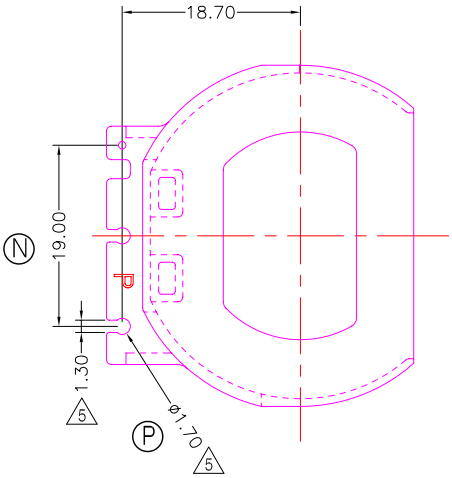

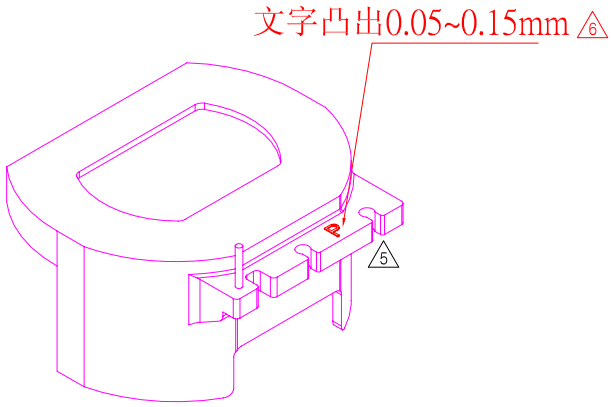

與TBI-239-04491.12XX(CC3319-5P-TH-5.0-D9-12)配套使用;

DWG NO.	CC3319-1P-CASE-E0-12					
PART NO.	MATERIAL (BOBBIN)	MATERIAL (TERMINAL)	TERMINAL (PLATING)	PIN ALLOCATION	NOTE	
TBI-239-04501.1206	PM-9820	CP WIRE	Sn	ALL PIN P/L=2.7±0.2		S
TBI-239-04501.1216	PM-9820	CP WIRE	Sn	ALL PIN P/L=3.5±0.2		H
TBI-239-04501.1226	PM-9820	CP WIRE	Sn	ALL PIN P/L=3.6±0.2		
	TOLERANCE: 0<L<=4:±0.1 4<L<=16:±0.2 16<L:±0.3			UNIT : m / m	SCALE 1 :1	

Finish:
1. PB wire Immersion Sn on terminal : Thickness:Sn plating,100,5 μm (200 μinches) min,Base nickel 0.625 μm (25 μ inches) min.
2. CP wire Immersion Sn on terminal : Thickness:Sn plating,100,5 μm (200 μinches) min.
3. Coplanarity deviation: 0.10 mm (0.004 inches)max.

REV 6