TBI TRANSFORMER BOBBIN INDUSTRIAL CO.,LTD.
Tel : 86-769-88789999 Fax : 86-769-88789989
http:// tbi-tw.com e-mail : tb6688@ms46.hinet.net

REVISIONS				
REV	SYM	DRAFTER	CHECKER	DATE
1		X.H.GU	G.F.YANG	07/08/16
2				
3				

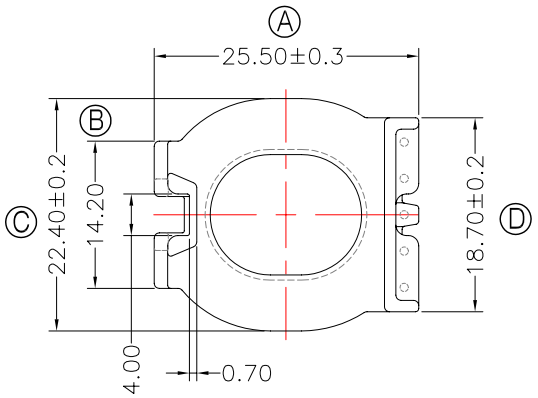

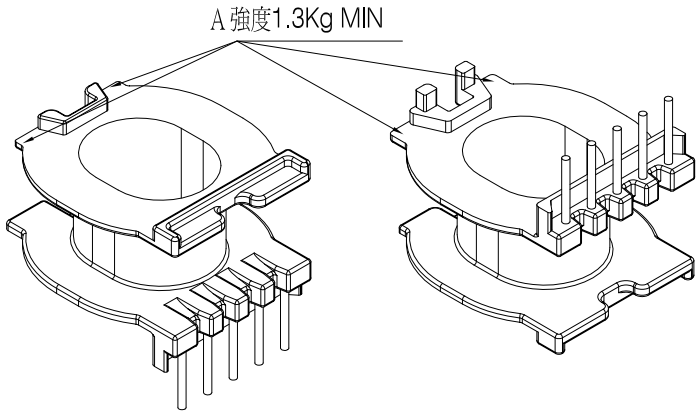

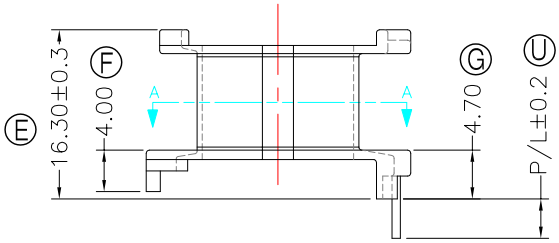

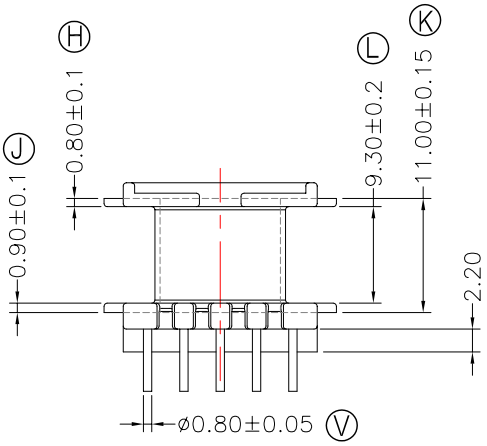

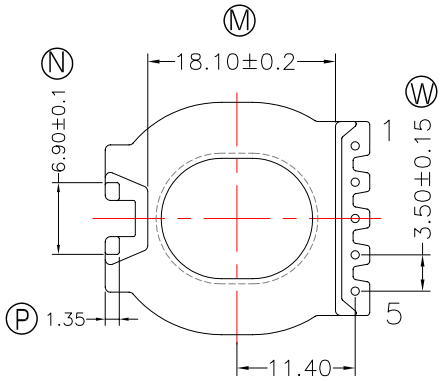

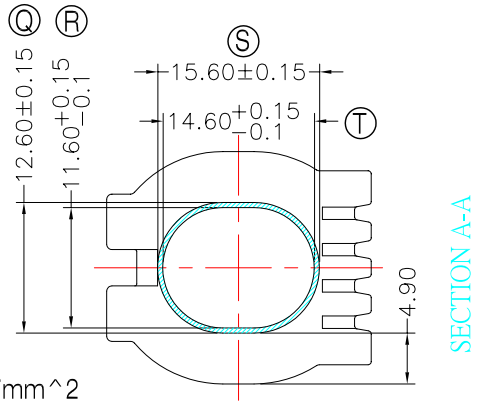

NOTE:
1.耐壓4.0Kv /1.5mA 60S;
2.焊錫溫度:450°±10° 3SEC
3.Winding Space=9.3*4.9=45.57mm^2
4.焊錫前拉力:1.0KG MIN,焊錫後拉力:1.5KG MIN;
5.任一點的強度爲1.8kg MIN;其中頂部A處爲1.3kg MIN;
與TBI-238-48061.17C(ATQ27-17J-CASE-F-17))配套使用;

DWG NO.	ATQ27-17J-5P-TH-F-17					
PART NO.	MATERIAL (BOBBIN)	MATERIAL (TERMINAL)	TERMINAL (PLATING)	PIN ALLOCATION	NOTE	
TBI-238-48061.1706	PM-9823	CP WIRE	Sn	ALL PIN P/L=3.8±0.2		S
TBI-238-48061.1716	PM-9823	CP WIRE	Sn	ALL PIN P/L=5.5±0.2		

TOLERANCE: 0<L<=4:±0.1 4<L<=16:±0.2 16<L<=63:±0.3	UNIT : m / m	SCALE 1 :1	

Finish: 1. PB wire Immersion Sn on terminal : Thickness:Sn plating,100%,5μm (200μinches) min,Base nickel 0.625μm (25μ inches) min.
2. CP wire Immersion Sn on terminal : Thickness:Sn plating,100%,5μm (200μinches) min.
3. Coplanarity deviation: 0.10 mm (0.004 inches)max.

REV 1