TBI TRANSFORMER BOBBIN INDUSTRIAL CO.,LTD.
Tel : 86-769-88789999 Fax : 86-769-88789989
http:// tbi-tw.com e-mail : tb6688@ms46.hinet.net

REVISIONS

REV	SYM	DRAFTER	CHECKER	DATE
1		H.X.DUAN	G.F.YANG	06/10/10
2		G.F.YANG	W.H.HSU	10/28/10
3				

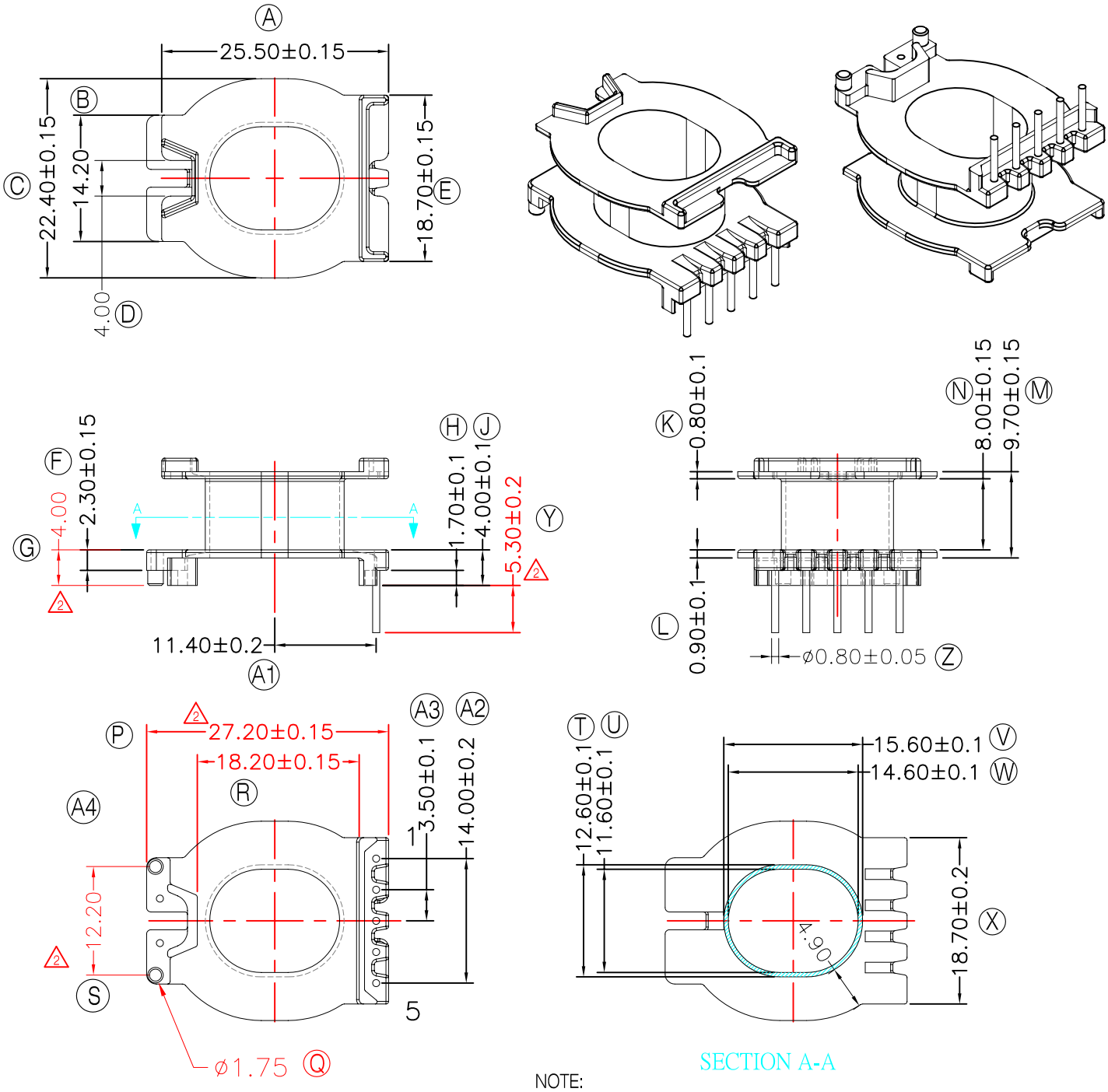

NOTE:
Winding Space=4.9*8=39. 2mm^2

DWG NO.	ATQ27-16-1-5P-TH-D0-12					
PART NO.	MATERIAL (BOBBIN)	MATERIAL (TERMINAL)	TERMINAL (PLATING)	PIN ALLOCATION	NOTE	
TBI-238-03401.1206	PM-9820	CP WIRE	Sn	ALL PIN	用于T1	S
						H

TOLERANCE: 0<L<=4±0.1 4<L<=16±0.2 16<L<=63±0.3 Pin Pitch ±0.2 | UNIT : m / m | SCALE 1 :1

Finish:
1. PB wire Immersion Sn on terminal : Thickness:Sn plating,100,5 μm (200 μ inches) min,Base nickel 0.625 μm (25 μ inches) min.
2. CP wire Immersion Sn on terminal : Thickness:Sn plating,100,5 μm (200 μ inches) min.
3. Coplanarity deviation: 0.10 mm (0.004 inches)max.

REV 2