TBI TRANSFORMER BOBBIN INDUSTRIAL CO.,LTD.
Tel : 86-769-88789999 Fax : 86-769-88789989
http:// tbi-tw.com e-mail : tb6688@ms46.hinet.net

REVISIONS				
REV	SYM	DRAFTER	CHECKER	DATE
1		G.F.YANG	W.H.HSU	02/11/10
2				
3				

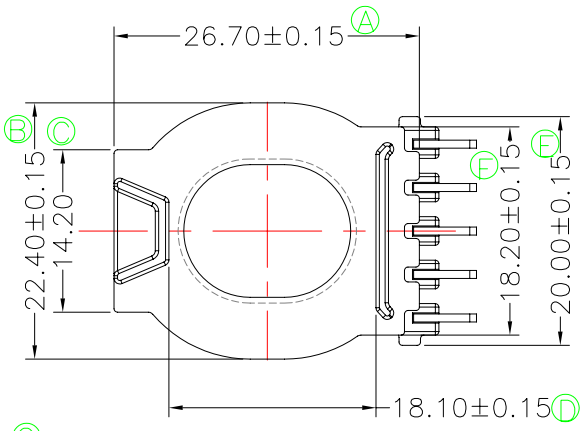

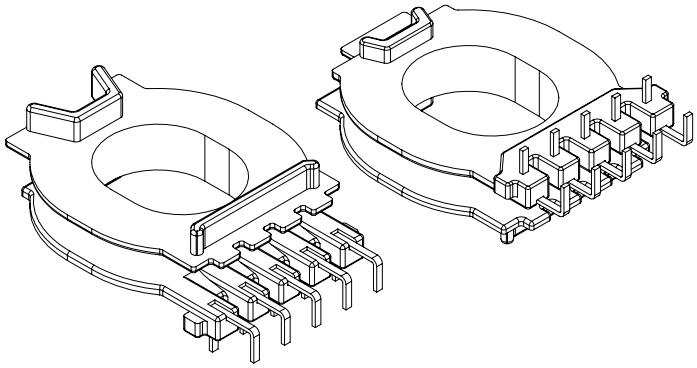

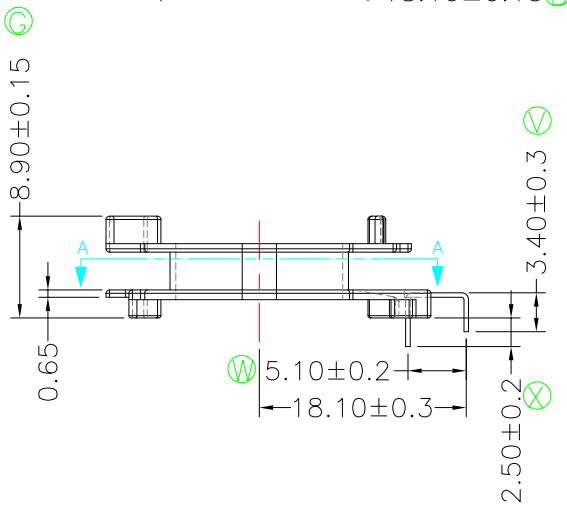

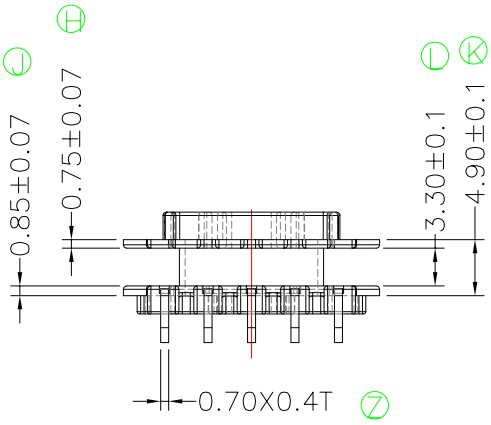

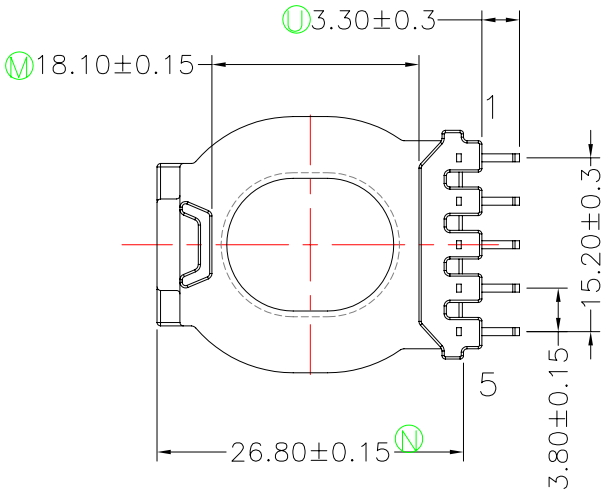

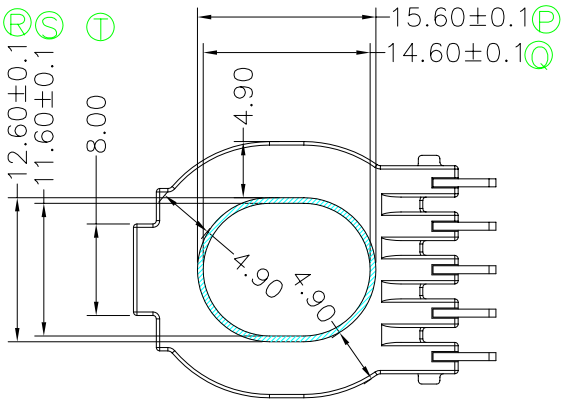

SECTION A-A

NOTE:

1. WINDING SPACE:3.3mm*4.9mm=16.17mm²

DWG NO.	ATQ27-11.2-5P-THT-C6-11				
PART NO.	MATERIAL (BOBBIN)	MATERIAL (TERMINAL)	TERMINAL (PLATING)	PIN ALLOCATION	NOTE
TBI-238-03361.1106	PM-9630	CP WIRE	Sn	ALL PIN	
	TOLERANCE: .XX±0.2 .XXX±0.1			UNIT : m / m	SCALE 1 :1

Finish:
1. PB wire Immersion Sn on terminal : Thickness:Sn plating,100,5 μm (200 μinches) min,Base nickel 0.625 μm (25 μ inches) min.
2. CP wire Immersion Sn on terminal : Thickness:Sn plating,100,5 μm (200 μinches) min.
3. Coplanarity deviation: 0.10 mm (0.004 inches)max.

REV 1