TBI TRANSFORMER BOBBIN INDUSTRIAL CO.,LTD.
Tel : 86-769-88789999 Fax : 86-769-88789989
http:// tbi-tw.com e-mail : tb6688@ms46.hinet.net

REVISIONS				
REV	SYM	DRAFTER	CHECKER	DATE
1		H.X.DUAN	G.F.YANG	11/01/13
2				
3				

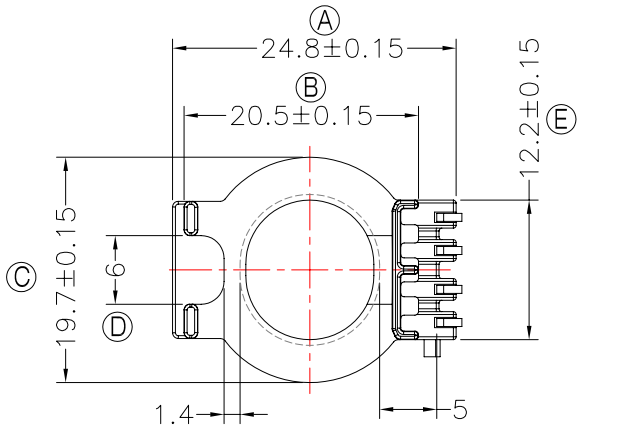

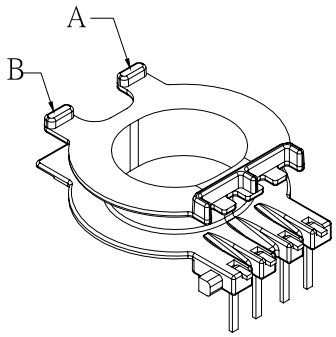

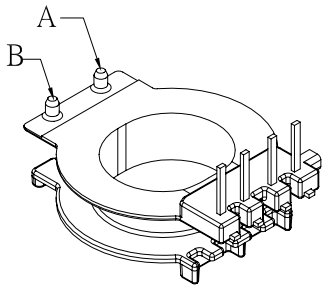

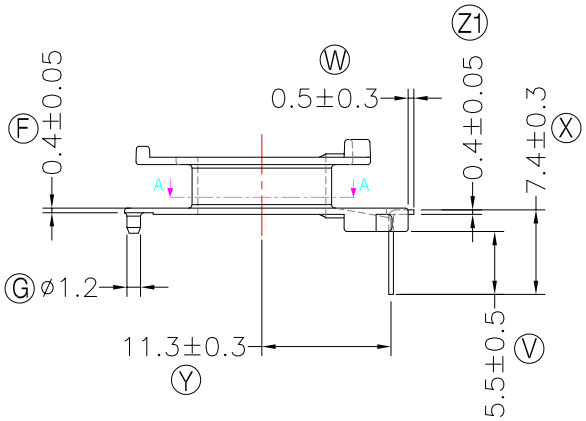

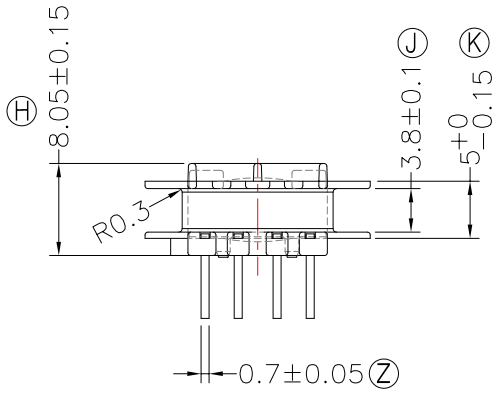

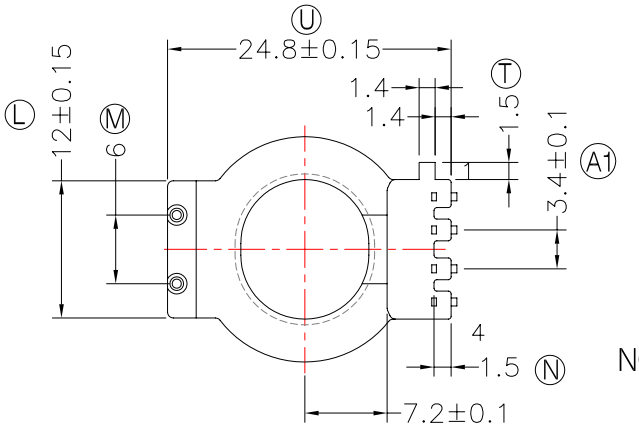

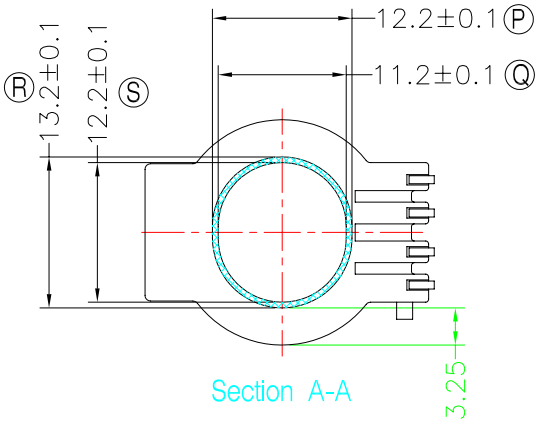

NOTE:
任一點的強度爲1.5kg MIN 其中上下葉片凸點 A,B處爲0.8kg MIN
WINDING SPACE: 3.8mm*3.25mm=12.35mm²

DWG NO.	ATQ23.2-10.2-4P-THL-C2-11					
PART NO.	MATERIAL (BOBBIN)	MATERIAL (TERMINAL)	TERMINAL (PLATING)	PIN ALLOCATION	NOTE	
TBI-238-10321.1106	PM-9630	CP WIRE	Sn	ALL PIN		S
						H

	TOLERANCE: .XX±0.1 .XXX±0.05	UNIT : m / m	SCALE 1 : 1

Finish:
1. PB wire Immersion Sn on terminal : Thickness:Sn plating,100,5μm (200μinches) min,Base nickel 0.625μm (25μ inches) min.
2. CP wire Immersion Sn on terminal : Thickness:Sn plating,100,5μm (200μinches) min.
3. Coplanarity deviation: 0.10 mm (0.004 inches)max.

REV 1