TBI TRANSFORMER BOBBIN INDUSTRIAL CO.,LTD.
Tel : 86-769-88789999 Fax : 86-769-88789989
http:// tbi-tw.com e-mail : tb6688@ms46.hinet.net

REVISIONS				
REV	SYM	DRAFTER	CHECKER	DATE
2		X.H.GU	G.F.YANG	07/10/13
3				
3				

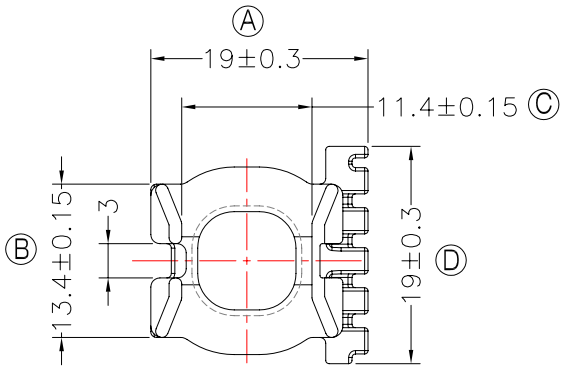

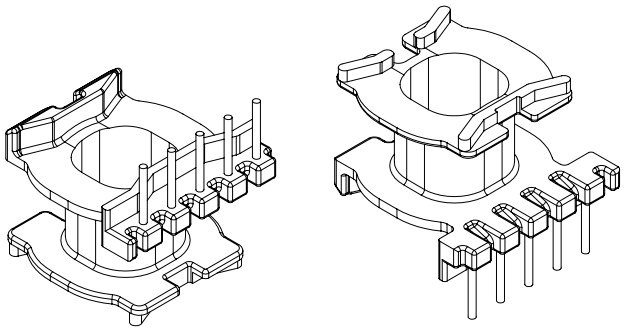

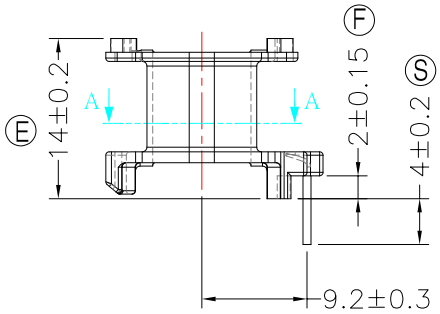

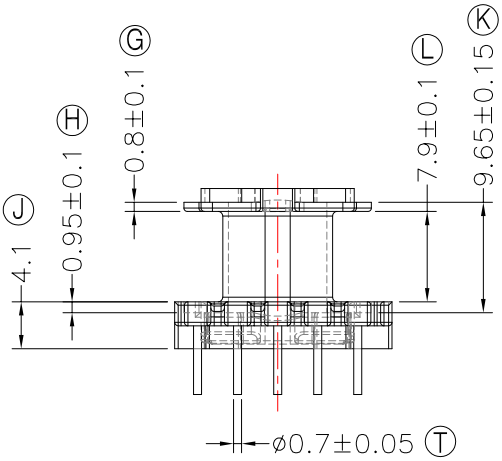

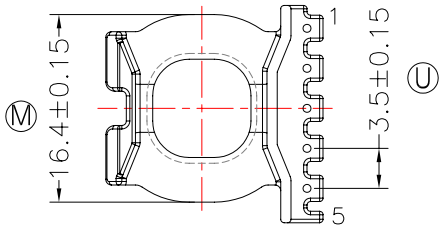

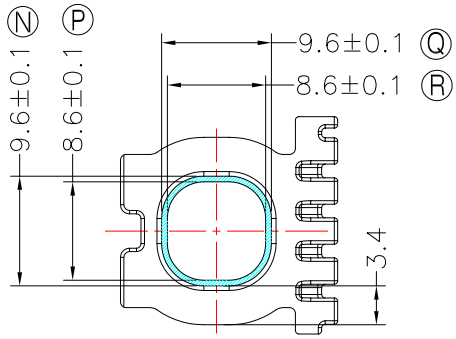

SECTION A-A

WINDING SPACE: 7.9mm*3.4mm=26.86mm2

DWG NO.	ATQ21-15.2-5P-TH-B2-12					
PART NO.	MATERIAL (BOBBIN)	MATERIAL (TERMINAL)	TERMINAL (PLATING)	PIN ALLOCATION	NOTE	
TBI-238-13221.1206	PM-9820	CP WIRE	Sn	ALL PIN		S

	TOLERANCE: 0<L<=4:±0.1 4<L<=16:±0.2 16<L<=63:±0.3	UNIT : m / m	SCALE 1 : 1

Finish:
1. PB wire Immersion Sn on terminal : Thickness:Sn plating,100,5 μm (200 μinches) min,Base nickel 0.625 μm (25 μ inches) min.
2. CP wire Immersion Sn on terminal : Thickness:Sn plating,100,5 μm (200 μinches) min.
3. Coplanarity deviation: 0.10 mm (0.004 inches)max.

REV 1