TBI TRANSFORMER BOBBIN INDUSTRIAL CO.,LTD.
Tel : 86-769-88789999 Fax : 86-769-88789989
http:// tbi-tw.com e-mail : tb6688@ms46.hinet.net

REVISIONS

REV	SYM	DRAFTER	CHECKER	DATE
2		X.H.GU	G.F.YANG	05/27/11
3		X.H.GU	G.F.YANG	06/23/11
3		H.X.DUAN	G.F.YANG	10/12/11

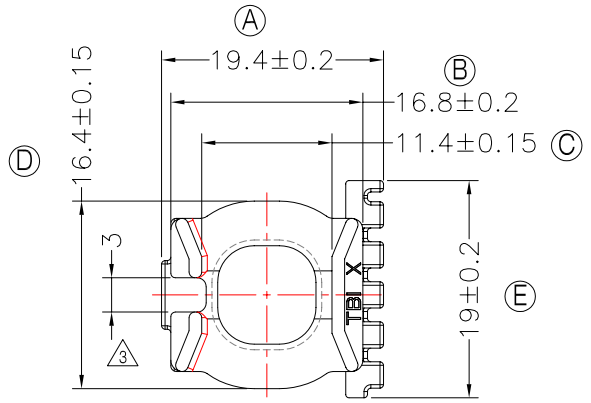

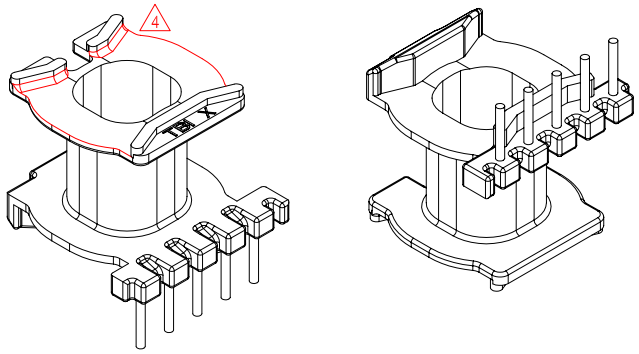

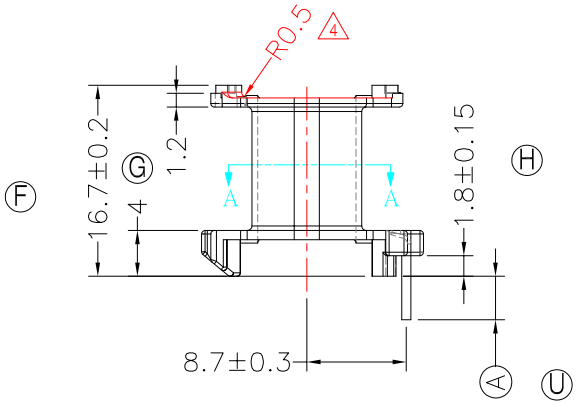

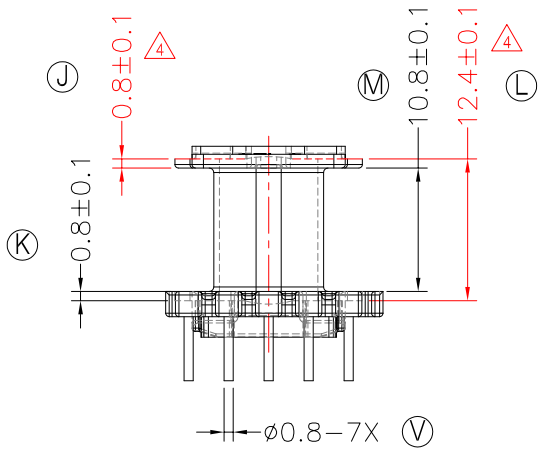

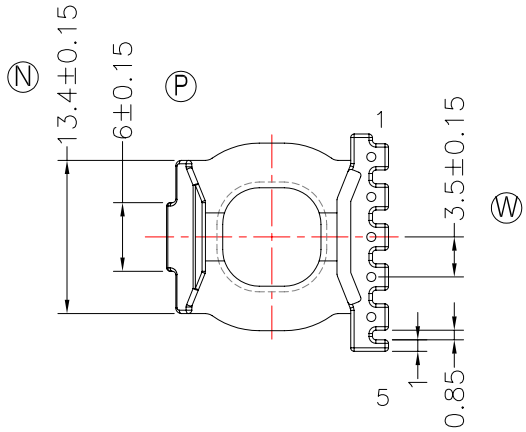

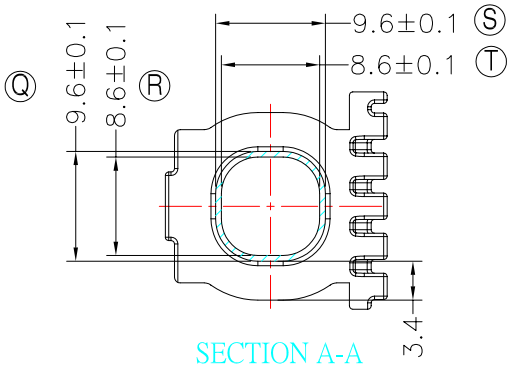

NOTE:
WINDING SPACE: 10.8mm*3.4mm=36.72mm²

DWG NO.	ATQ21-17.6-5P-TH-A5-12					
PART NO.	MATERIAL (BOBBIN)	MATERIAL (TERMINAL)	TERMINAL (PLATING)	PIN ALLOCATION	NOTE	
TBI-238-13151.1206	PM-9820	CP WIRE	Sn	ALL PIN A=3.8±0.2		S
TBI-238-13151.1216	PM-9820	CP WIRE	Sn	NO PIN#3 A=3.8±0.2		H
TBI-238-13151.1226	PM-9820	CP WIRE	Sn	ALL PIN A=3.3±0.2	無刀模	
TBI-238-13151.1236	PM-9820	CP WIRE	Sn	NO PIN#3 A=3.3±0.2	無刀模	
	TOLERANCE: 0<L<=4:±0.1 4<L<=16:±0.2 16<L<=63:±0.3			UNIT : m / m	SCALE 1 : 1	

Finish:
1. PB wire Immersion Sn on terminal : Thickness:Sn plating,100,5μm (200μinches) min,Base nickel 0.625μm (25μ inches) min.
2. CP wire Immersion Sn on terminal : Thickness:Sn plating,100,5μm (200μinches) min.
3. Coplanarity deviation: 0.10 mm (0.004 inches)max.

REV 4