TBI TRANSFORMER BOBBIN INDUSTRIAL CO.,LTD.
Tel : 86-769-88789999 Fax : 86-769-88789989
http:// tbi-tw.com e-mail : tb6688@ms46.hinet.net

REVISIONS				
REV	SYM	DRAFTER	CHECKER	DATE
1-1		G.F.YANG	W.H.HSU	12/02/09
2				
3				

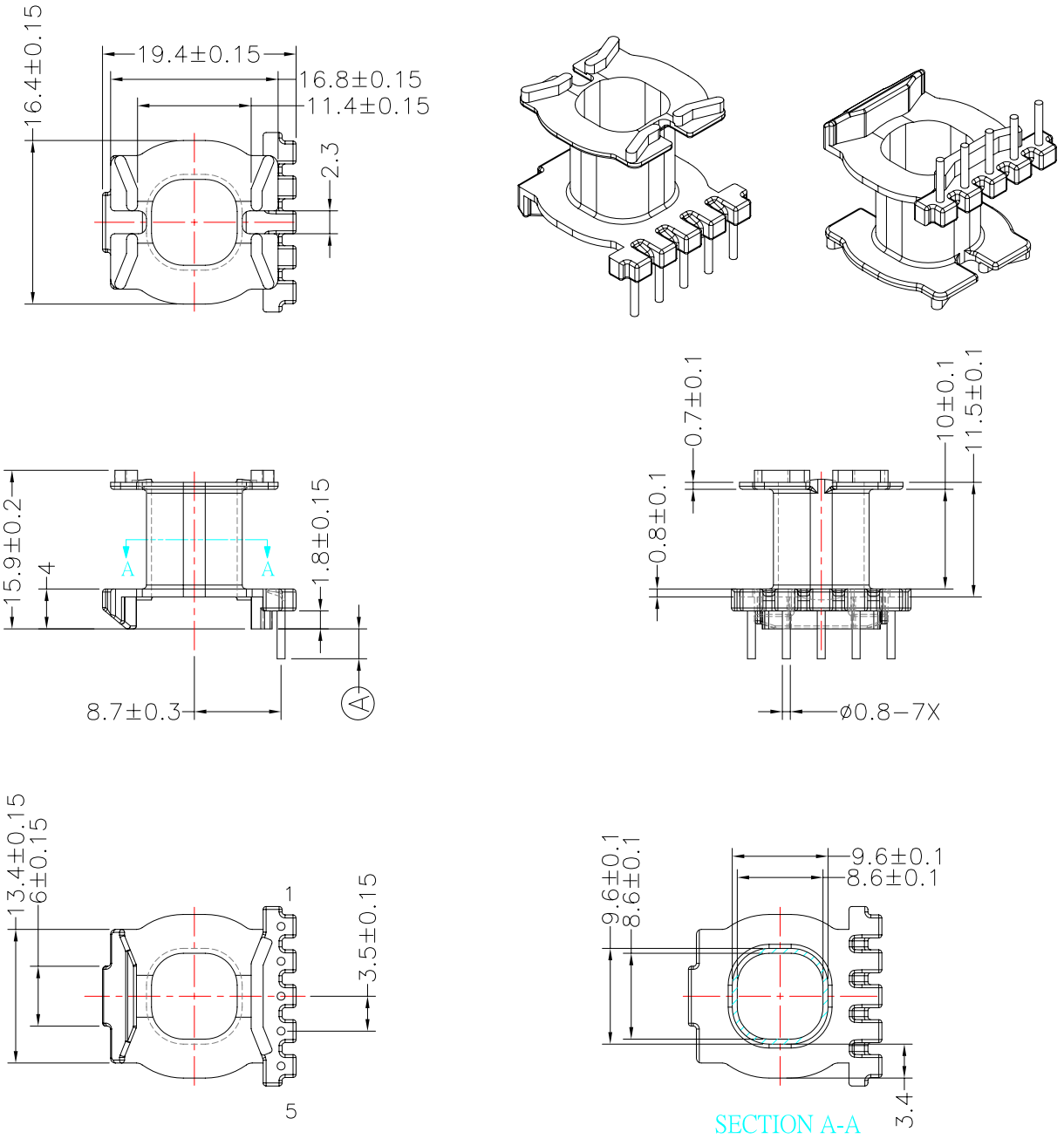

NOTE:
WINDING SPACE: 3.4mm*10mm=34mm²

DWG NO.	ATQ21-16.8-5P-TH-H-12					
PART NO.	MATERIAL (BOBBIN)	MATERIAL (TERMINAL)	TERMINAL (PLATING)	PIN ALLOCATION	NOTE	
TBI-238-13081.1206	PM-9820	CP WIRE	Sn	ALL PIN A=3.0±0.2		S
TBI-238-13081.1216	PM-9820	CP WIRE	Sn	ALL PIN A=4.0±0.2		

TOLERANCE: .XX±0.1 .XXX±0.05 | UNIT : m / m | SCALE 1 : 1

Finish:
1. PB wire Immersion Sn on terminal : Thickness:Sn plating,100,5μm (200μinches) min,Base nickel 0.625μm (25μ inches) min.
2. CP wire Immersion Sn on terminal : Thickness:Sn plating,100,5μm (200μinches) min.
3. Coplanarity deviation: 0.10 mm (0.004 inches)max.

REV 1