TBI TRANSFORMER BOBBIN INDUSTRIAL CO.,LTD.
Tel : 86-769-88789999 Fax : 86-769-88789989
http:// tbi-tw.com e-mail : tb6688@ms46.hinet.net

REVISIONS				
REV	SYM	DRAFTER	CHECKER	DATE
1		X.H.GU	G.F.YANG	10/30/15
2				
3				

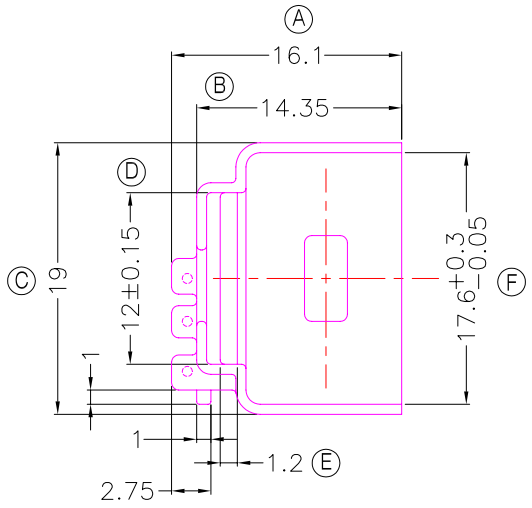

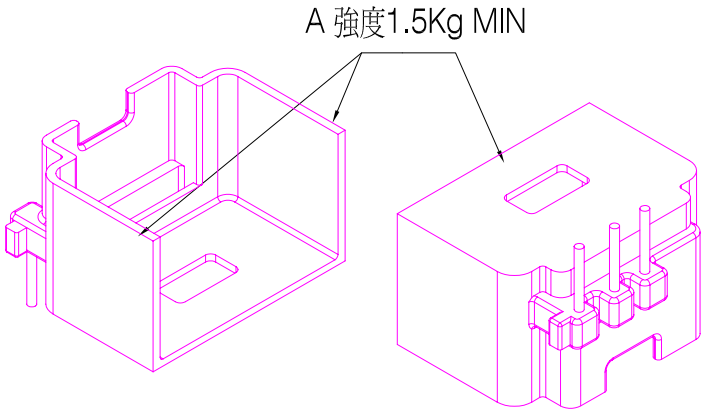

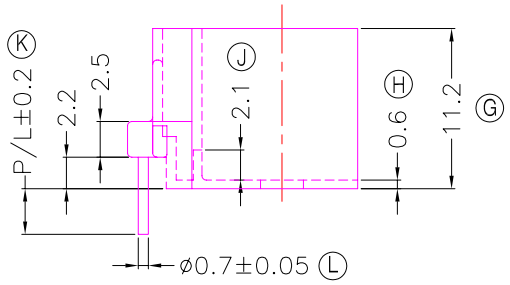

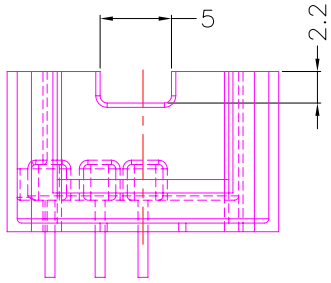

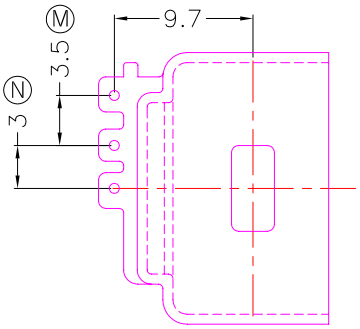

NOTE:

1.耐壓4.0Kv /1.5mA 60S;

2.焊錫溫度:450°±10° 3SEC

3.焊錫前拉力:1.0KG MIN,焊錫後拉力:1.5KG MIN;

4.任意一點強度須1.8kg MIN;(除以下測試點.A.處爲1.5kg min).

與TBI-238-26251.11XX(ATQ17-10.9A-5P-TH-B5-11)配套使用;

DWG NO.	ATQ17-10.9A-3P-CASE-B6-11					
PART NO.	MATERIAL (BOBBIN)	MATERIAL (TERMINAL)	TERMINAL (PLATING)	PIN ALLOCATION	NOTE	
TBI-238-26261.1106	PM-9630	CP WIRE	Sn	ALL PIN P/L=3.0±0.2		S
						H
	TOLERANCE:0<L<=4:±0.1 4<L<=16:±0.2 16<L<=63:±0.3			UNIT : m / m	SCALE 1 : 1	

Finish: 1. PB wire Immersion Sn on terminal : Thickness:Sn plating,100%,5μm (200μinches) min,Base nickel 0.625μm (25μ inches) min.
2. CP wire Immersion Sn on terminal : Thickness:Sn plating,100%,5μm (200μinches) min.
3. Coplanarity deviation: 0.10 mm (0.004 inches)max.

REV 1