TBI TRANSFORMER BOBBIN INDUSTRIAL CO.,LTD.
Tel : 86-769-88789999 Fax : 86-769-88789989
http:// tbi-tw.com e-mail : tb6688@ms46.hinet.net

REVISIONS

REV	SYM	DRAFTER	CHECKER	DATE
1		X.H.GU	G.F.YANG	05/30/13
2		H.X.DUAN	G.F.YANG	07/19/13
3		H.X.DUAN	G.F.YANG	08/22/13

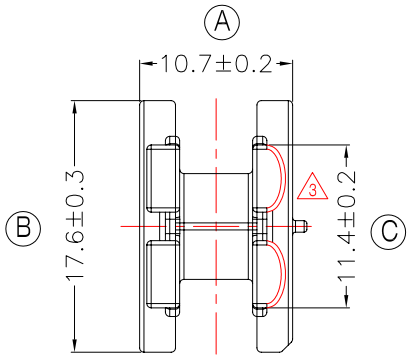

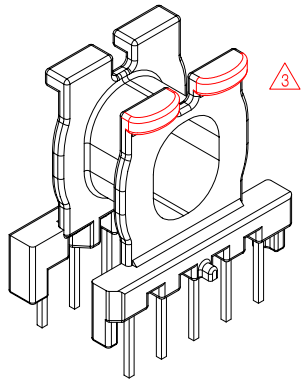

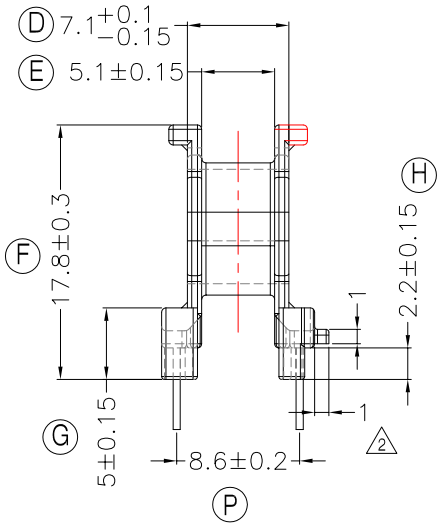

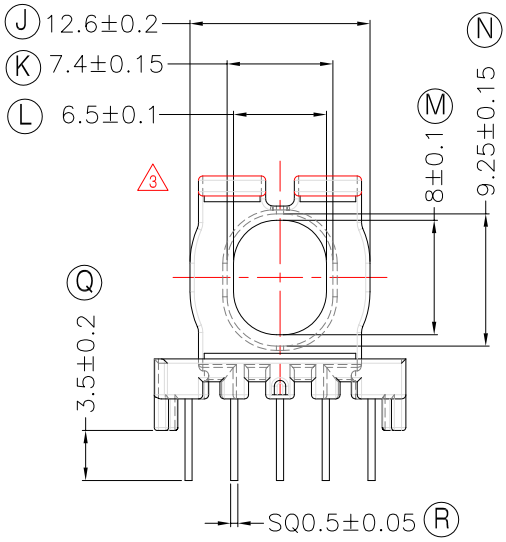

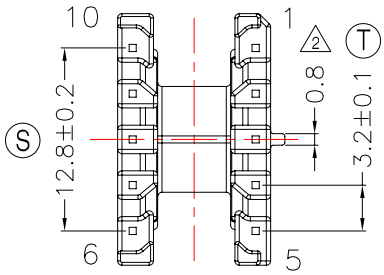

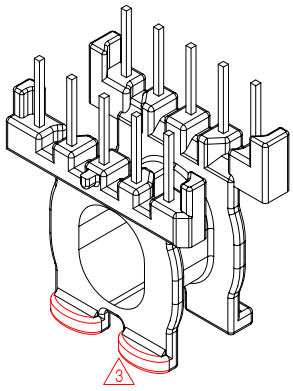

NOTE:

WINDING SPACE:5.1mm*2.6mm=13.26mm²

DWG NO.	ATQ17-11.5A-10P-TH-A0-12					
PART NO.	MATERIAL (BOBBIN)	MATERIAL (TERMINAL)	TERMINAL (PLATING)	PIN ALLOCATION	NOTE	
TBI-238-26101.1206	PM-9820	CP WIRE	Sn	ALL PIN		S
TBI-238-26101.1216	PM-9820	CP WIRE	Sn	CUT PIN#6,7,8,9,10		H

TOLERANCE:0<L<=4:±0.1 4<L<=16:±0.2 16<L<=63:±0.3 | UNIT : m / m | SCALE 1 : 1

Finish:
1. PB wire Immersion Sn on terminal : Thickness:Sn plating,100,5 μm (200 μinches) min,Base nickel 0.625 μm (25 μ inches) min.
2. CP wire Immersion Sn on terminal : Thickness:Sn plating,100,5 μm (200 μinches) min.
3. Coplanarity deviation: 0.10 mm (0.004 inches)max.

REV 3