TBI TRANSFORMER BOBBIN INDUSTRIAL CO.,LTD.
Tel : 86-769-88789999 Fax : 86-769-88789989
http:// tbi-tw.com e-mail : tb6688@ms46.hinet.net

REVISIONS				
REV	SYM	DRAFTER	CHECKER	DATE
1		H.X.DUAN	G.F.YANG	11/10/11
2				
3				

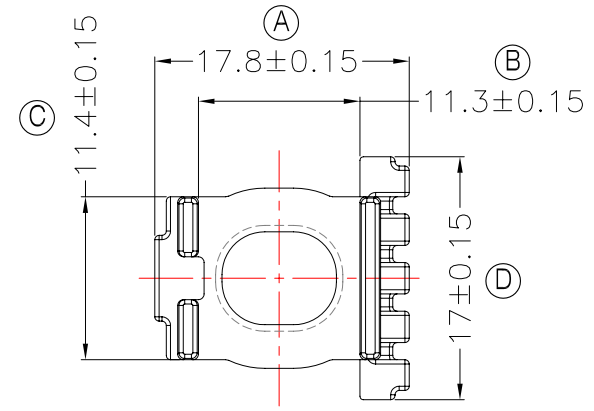

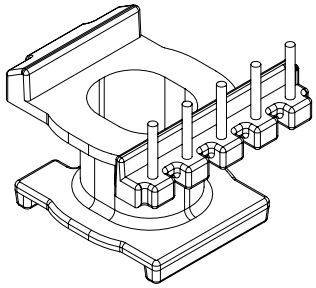

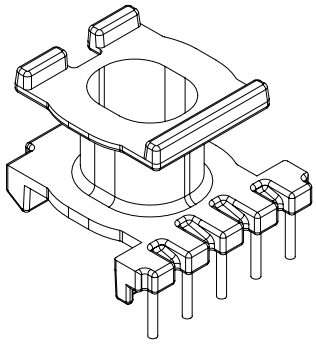

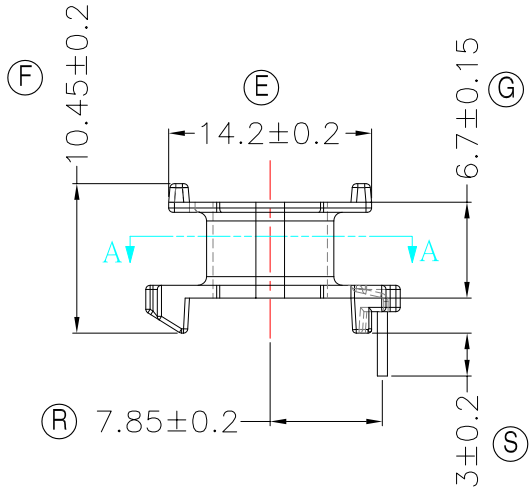

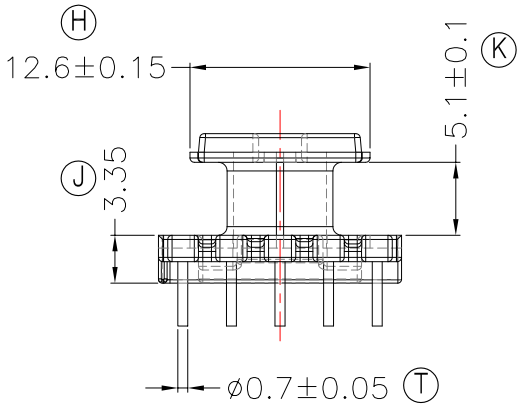

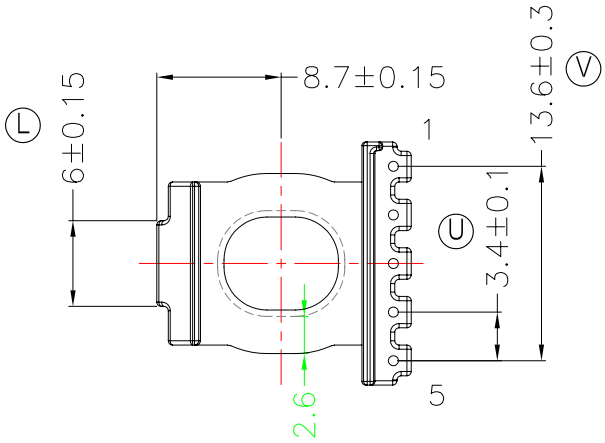

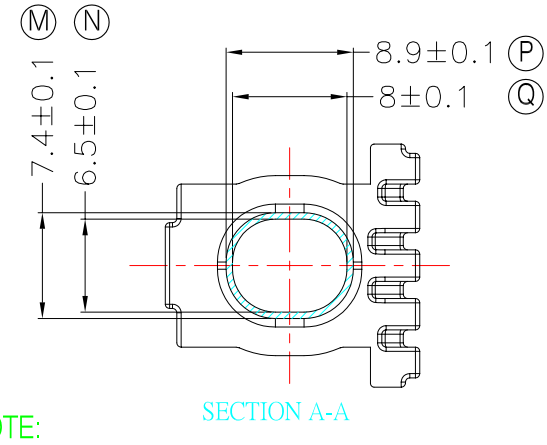

NOTE:

WINDING SPACE:5.1mm*2.6mm=13.26mm²

DWG NO.	ATQ17-10.9A-5P-TH-D-12					
PART NO.	MATERIAL (BOBBIN)	MATERIAL (TERMINAL)	TERMINAL (PLATING)	PIN ALLOCATION	NOTE	
TBI-238-26041.1206	PM-9820	CP WIRE	Sn	ALL PIN		S

TOLERANCE:0<L<=4:±0.1 4<L<=16:±0.2 16<L<=63:±0.3	UNIT : m / m	SCALE 1 : 1	

Finish:
1. PB wire Immersion Sn on terminal : Thickness:Sn plating,100,5μm (200μinches) min,Base nickel 0.625μm (25μ inches) min.
2. CP wire Immersion Sn on terminal : Thickness:Sn plating,100,5μm (200μinches) min.
3. Coplanarity deviation: 0.10 mm (0.004 inches)max.

REV 1