TBI TRANSFORMER BOBBIN INDUSTRIAL CO.,LTD.
Tel : 86-769-88789999 Fax : 86-769-88789989
http:// tbi-tw.com e-mail : tb6688@ms46.hinet.net

REVISIONS				
REV	SYM	DRAFTER	CHECKER	DATE
1		M.WANG	G.F.YANG	08/18/16
2				
3				

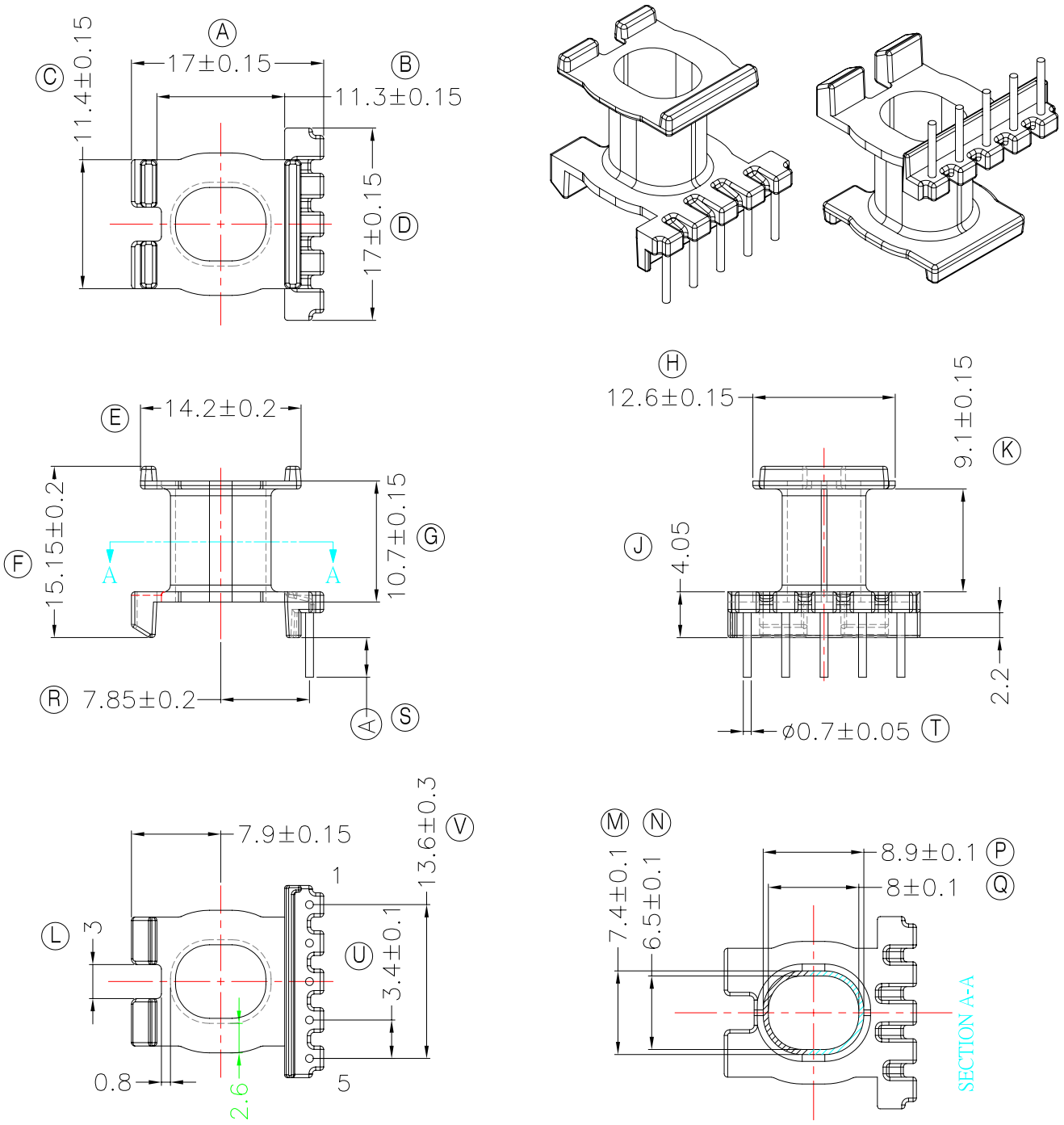

DWG NO.	ATQ17-15A-5P-TH-C-17					
PART NO.	MATERIAL (BOBBIN)	MATERIAL (TERMINAL)	TERMINAL (PLATING)	PIN ALLOCATION	NOTE	
TBI-238-26031.1706	PM-9823	CP WIRE	Sn	ALL PIN Ⓐ=3.5±0.2		S
TBI-238-26031.1716	PM-9823	CP WIRE	Sn	NO PIN#1,2,4 Ⓐ=4.5±0.2		H
TBI-238-26031.1726	PM-9823	CP WIRE	Sn	NO PIN#1,2,4 Ⓐ=3.5±0.2		
TBI-238-26031.1736	PM-9823	CP WIRE	Sn	NO PIN#1,2,4 Ⓐ=3.0±0.2		
	TOLERANCE:0<L<=4:±0.1 4<L<=16:±0.2 16<L<=63:±0.3			UNIT : m / m	SCALE 1 : 1	

Finish:
1. PB wire Immersion Sn on terminal : Thickness:Sn plating,100,5 μm (200 μinches) min,Base nickel 0.625 μm (25 μ inches) min.
2. CP wire Immersion Sn on terminal : Thickness:Sn plating,100,5 μm (200 μinches) min.
3. Coplanarity deviation: 0.10 mm (0.004 inches)max.

REV 1