TBI TRANSFORMER BOBBIN INDUSTRIAL CO.,LTD.
Tel : 86-769-88789999 Fax : 86-769-88789989
http:// tbi-tw.com e-mail : tb6688@ms46.hinet.net

REVISIONS

REV	SYM	DRAFTER	CHECKER	DATE
1		H.X.DUAN	G.F.YANG	11/07/12
2				
3				

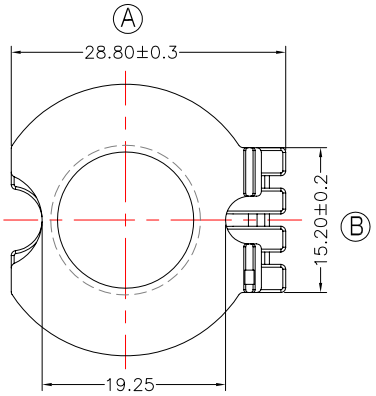

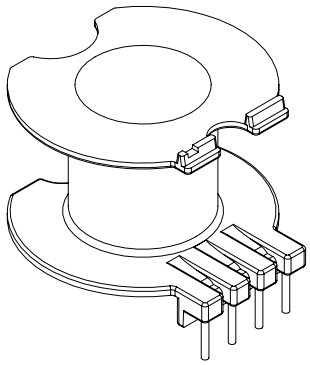

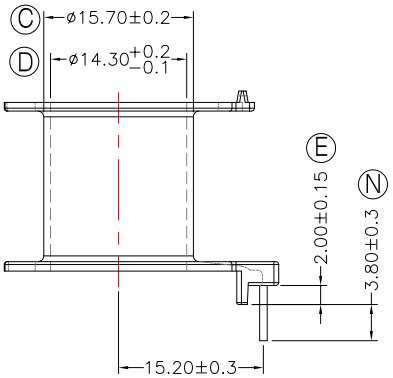

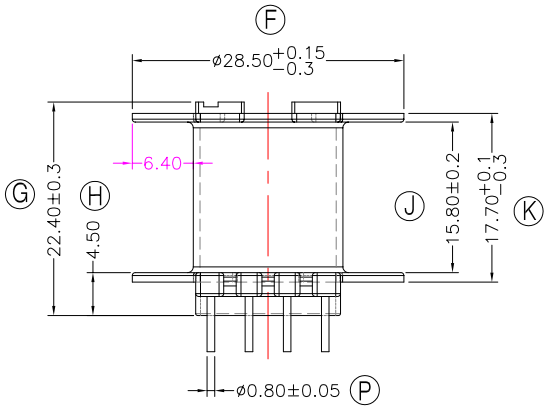

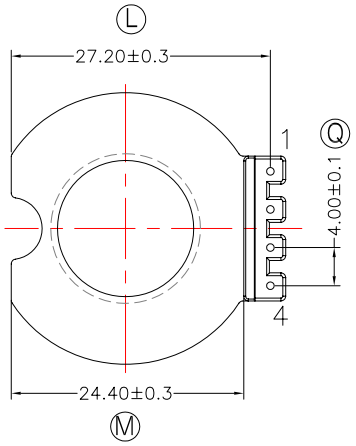

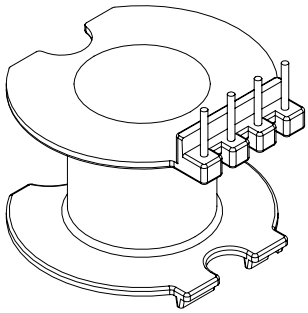

NOTE:
1.Winding Space=15.8*6.4=101.12mm^2

DWG NO.	LEP33-24.2-4P-TH-A2-11					
PART NO.	MATERIAL (BOBBIN)	MATERIAL (TERMINAL)	TERMINAL (PLATING)	PIN ALLOCATION	NOTE	
TBI-236-01121.1106	PM-9630	CP WIRE	Sn	ALL PIN		S
	TOLERANCE:0<L<=4:±0.1 4<L<=16:±0.2 16<L<=63:±0.3			UNIT : m / m	SCALE 1 : 1	

Finish:
1. PB wire Immersion Sn on terminal : Thickness:Sn plating,100,5 μm (200 μinches) min,Base nickel 0.625 μm (25 μ inches) min.
2. CP wire Immersion Sn on terminal : Thickness:Sn plating,100,5 μm (200 μinches) min.
3. Coplanarity deviation: 0.10 mm (0.004 inches)max.

REV 1