TBI TRANSFORMER BOBBIN INDUSTRIAL CO.,LTD.
Tel : 86-769-88789999 Fax : 86-769-88789989
http:// tbi-tw.com e-mail : tb6688@ms46.hinet.net

REVISIONS

REV	SYM	DRAFTER	CHECKER	DATE
2		S.Y.TANG	S.M.SHIH	11/07/06
3		S.Y.TANG	S.M.SHIH	01/26/07
4		G.F.YANG	W.H.HSU	12/10/07

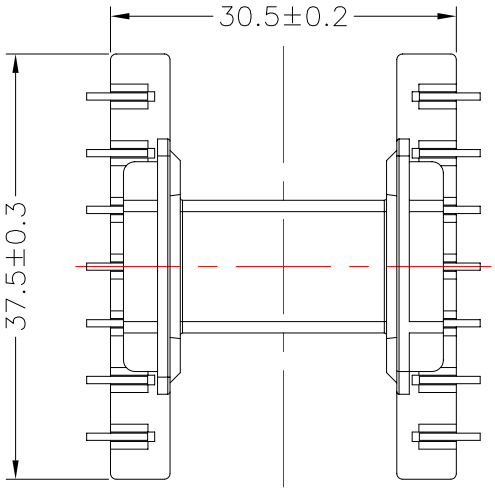

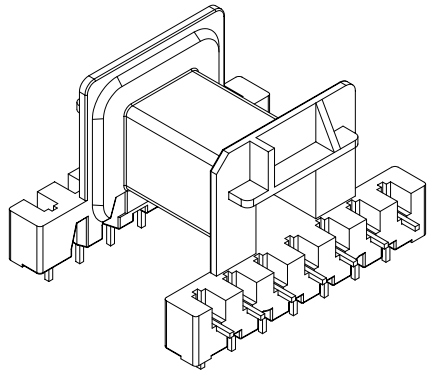

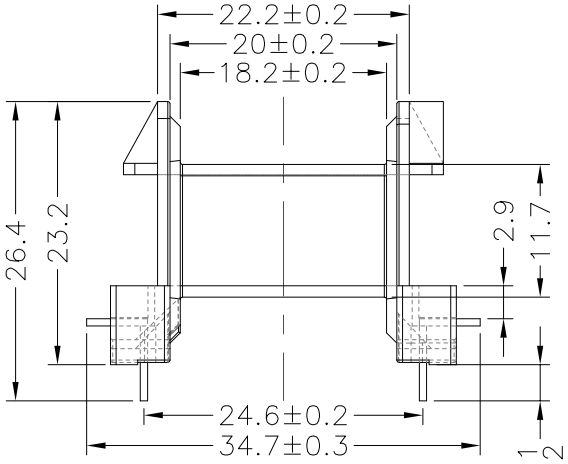

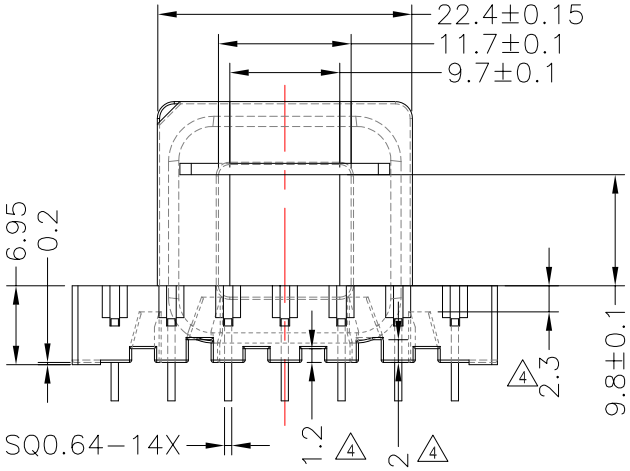

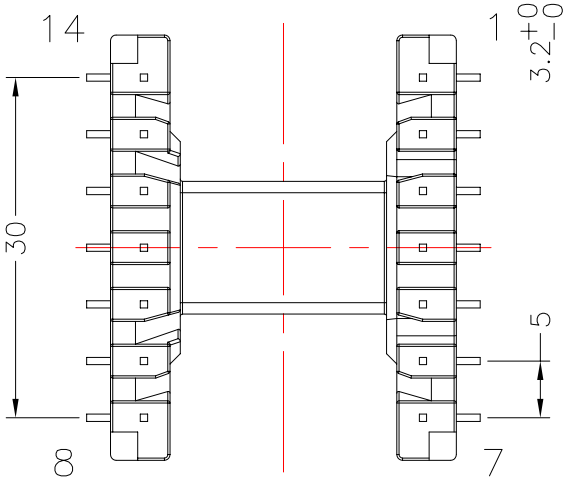

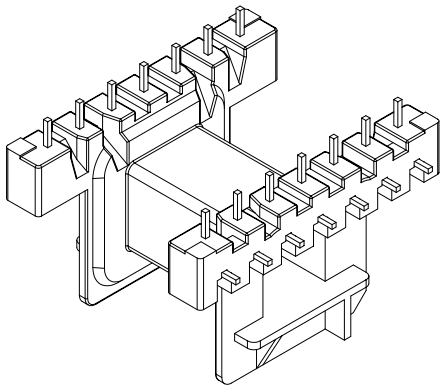

3 Note ：推力要求最小 2.0Kg

DWG NO.	E32/11A-14P-THL-5.0-A-9				
PART NO.	MATERIAL (BOBBIN)	MATERIAL (TERMINAL)	TERMINAL (PLATING)	PIN ALLOCATION	NOTE
TBI-201-05011.906	PET(FR530 or VG30)	CP WIRE	Sn	ALL PIN	
TBI-201-05011.916	PET(FR530 or VG30)	CP WIRE	Sn	Cut pin 9, 11, 13	52GTR582P001

TOLERANCE: .X±0.15 .XX±0.10 .XXX±0.05 | UNIT : m / m | SCALE 3 : 2

Finish:
1. Pb wire Immersion Sn on terminal : Thickness:Sn plating,100,5 μm (200 μ inches) min,Base nickel 0.625 μm (25 μ inches) min.
2. CP wire Immersion Sn on terminal : Thickness:Sn plating,100,5 μm (200 μ inches) min.
3. Coplanarity deviation: 0.10 mm (0.004 inches)max.

REV 4