TBI TRANSFORMER BOBBIN INDUSTRIAL CO.,LTD.
Tel : 86-769-88789999 Fax : 86-769-88789989
http:// tbi-tw.com e-mail : tb6688@ms46.hinet.net

REVISIONS				
REV	SYM	DRAFTER	CHECKER	DATE
1		M.WANG	G.F.YANG	08/10/16
2				
3				

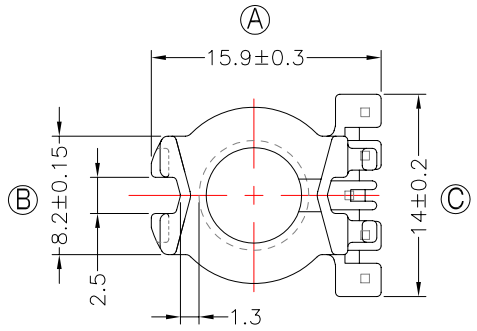

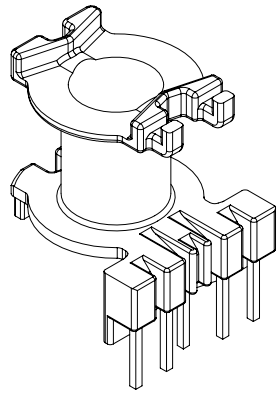

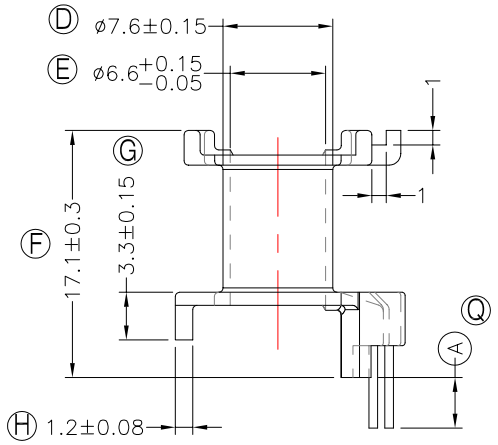

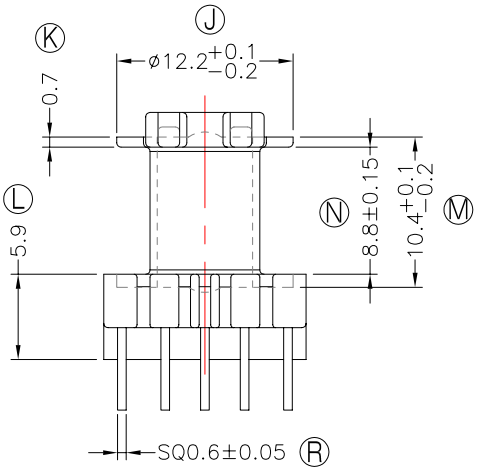

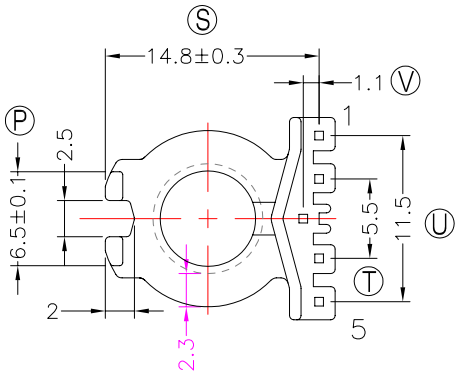

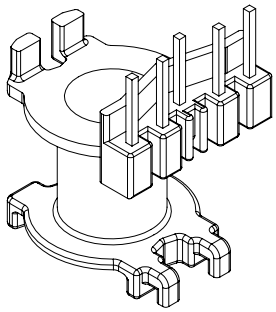

NOTE:
1.任意一點強度須1.5kg MIN;
2.耐壓4.0Kv /1.5mA 60S;
3.焊錫溫度:450°±10° 3SEC;
4.焊錫前拉力:1.0KG MIN,焊錫後拉力:1.5KG MIN;
5.Winding Space=8.8*2.3=20.24mm^2;
6.與TBI-208-02191.17C(RM6-15.2G-CASE-A9-17)配套使用;

DWG NO.	RM6-15.2G-5P-TH-A9-17					
PART NO.	MATERIAL (BOBBIN)	MATERIAL (TERMINAL)	TERMINAL (PLATING)	PIN ALLOCATION	NOTE	
TBI-208-02191.1706	PM-9823	CP WIRE	Sn	ALL PIN A=3.5±0.2		S
						H
	TOLERANCE: 0<L<=4:±0.1 4<L<=16:±0.2 16<L<=63:±0.3			UNIT : m / m	SCALE 1 : 1	

Finish: 1. PB wire Immersion Sn on terminal : Thickness:Sn plating,100%,5μm (200μinches) min,Base nickel 0.625μm (25μ inches) min.
2. CP wire Immersion Sn on terminal : Thickness:Sn plating,100%,5μm (200μinches) min.
3. Coplanarity deviation: 0.10 mm (0.004 inches)max.

REV 1