TBI TRANSFORMER BOBBIN INDUSTRIAL CO.,LTD.
Tel : 86-769-88789999 Fax : 86-769-88789989
http:// tbi-tw.com e-mail : tb6688@ms46.hinet.net

REVISIONS

REV	SYM	DRAFTER	CHECKER	DATE
9		T.S.LII	W.H.HSU	08/23/05
10		T.S.LII	W.H.HSU	07/24/06
11		Y.G.HSU	W.H.HSU	02/12/07

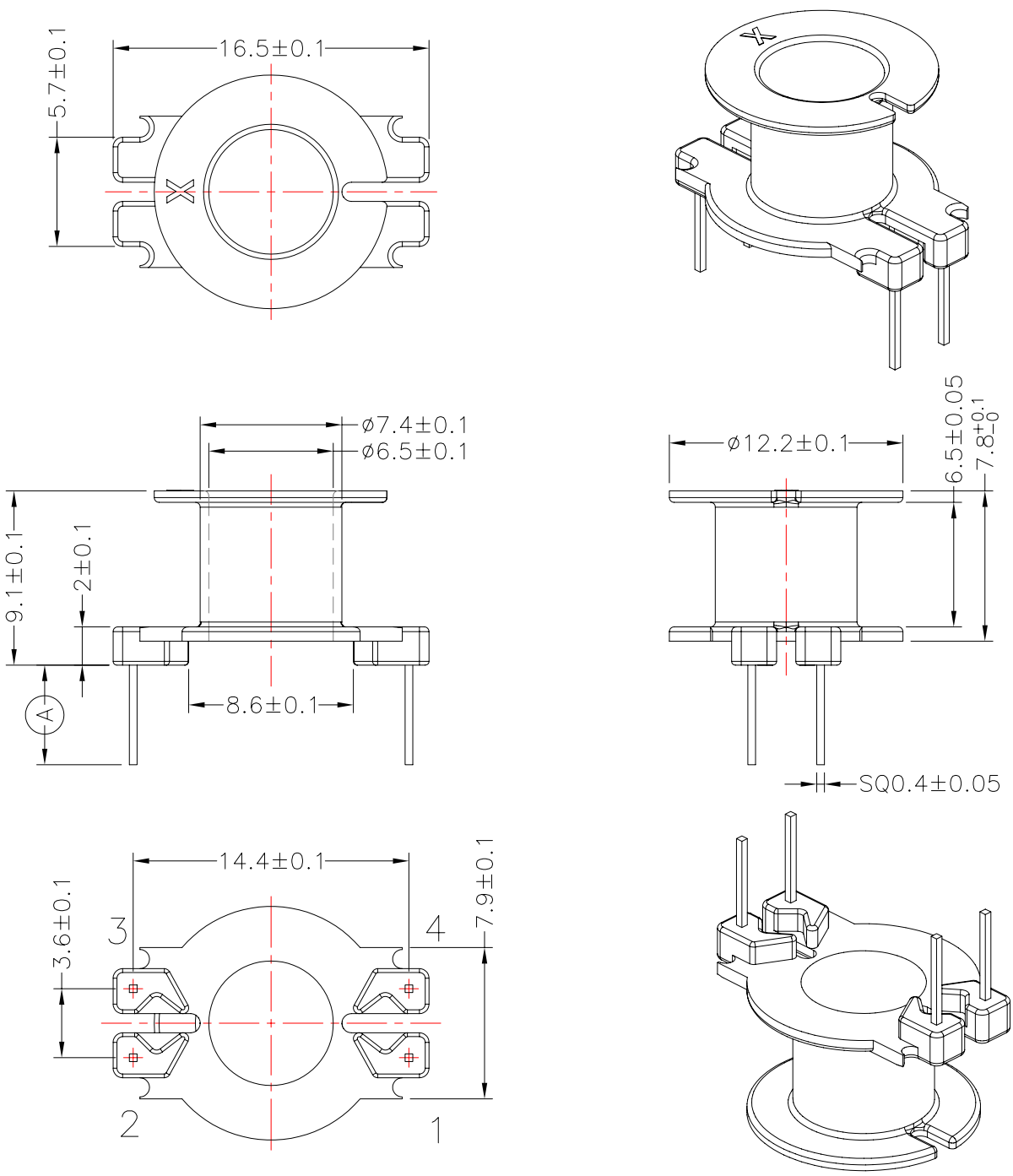

DWG NO.	RM6-4P-TH-B-1					
PART NO.	MATERIAL (BOBBIN)	MATERIAL (TERMINAL)	TERMINAL (PLATING)	PIN ALLOCATION	NOTE	
TBI-208-02021.106 11	PM-9630	CP WIRE	Sn	ALL PIN Ⓐ =3.8+0/-0.3		
TBI-208-02021.116	PM-9630	CP WIRE	Sn	CUT PIN #3, Ⓐ =5.7±0.3	已無刀模	H
TBI-208-02021.126	PM-9630	CP WIRE	Sn	ALL PIN Ⓐ =5.0±0.3		
	TOLERANCE: .X±0.15 .XX±0.10 .XXX±0.05			UNIT : m / m	SCALE 3 : 1	

Finish:
1. PB wire Immersion Sn on terminal : Thickness:Sn plating,100,5 μm (200 μ inches) min,Base nickel 0.625 μm (25 μ inches) min.
2. CP wire Immersion Sn on terminal : Thickness:Sn plating,100,5 μm (200 μ inches) min.
3. Coplanarity deviation: 0.10 mm (0.004 inches)max.

REV 11