TBI TRANSFORMER BOBBIN INDUSTRIAL CO.,LTD.
Tel : 86-769-88789999 Fax : 86-769-88789989
http:// tbi-tw.com e-mail : tb6688@ms46.hinet.net

REVISIONS

REV	SYM	DRAFTER	CHECKER	DATE
8		T.S.LII	W.H.HSU	07/24/06
9		S.Y.TANG	S.M.SHIH	12/11/06
10		S.Y.TANG	W.H.HSU	07/11/07

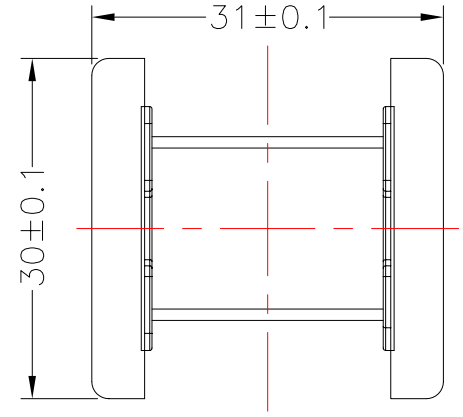

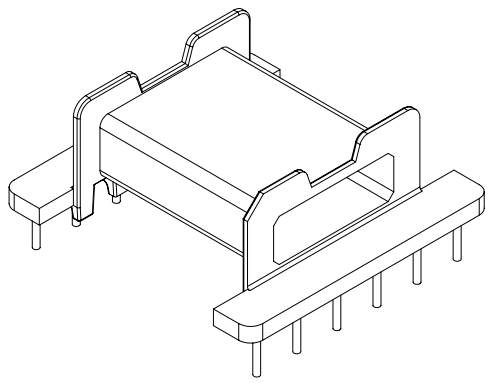

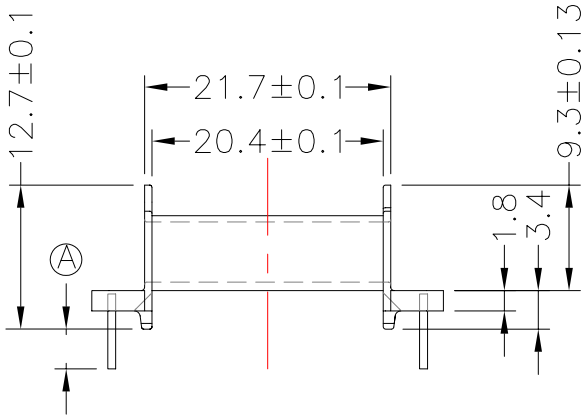

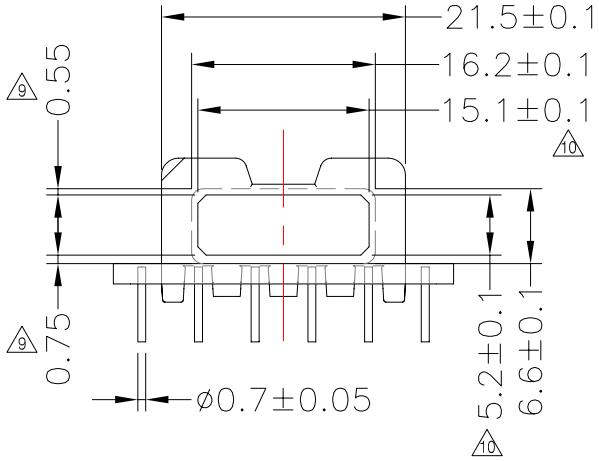

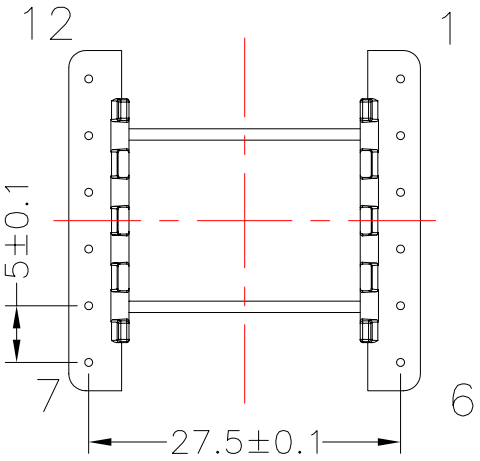

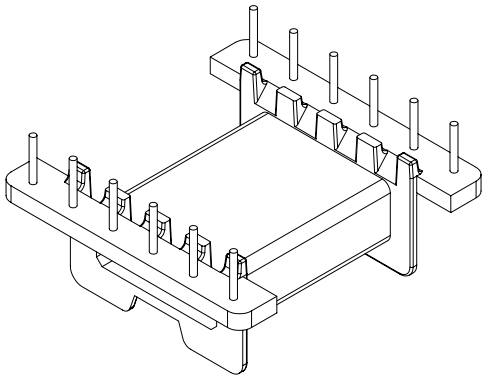

DWG NO.	EFD30-12P-TH-5-A-1				
PART NO.	MATERIAL (BOBBIN)	MATERIAL (TERMINAL)	TERMINAL (PLATING)	PIN ALLOCATION	NOTE
TBI-207-04011.106	PM-9630	CP WIRE	Sn	ALL PIN Ⓐ =3.5±0.2	
TBI-207-04011.116	PM-9630	CP WIRE	Sn	ALL PIN Ⓐ =5 ±0.3	
TBI-207-04011.126	PM-9630	CP WIRE	Sn	ALL PIN Ⓐ =7 ±0.3	

TOLERANCE: .X±0.15 .XX±0.10 .XXX±0.05 UNIT : m / m SCALE 1.5 : 1

Finish:
1. Pb wire Immersion Sn on terminal : Thickness:Sn plating,100,5 μm (200 μ inches) min,Base nickel 0.625 μm (25 μ inches) min.
2. CP wire Immersion Sn on terminal : Thickness:Sn plating,100,5 μm (200 μ inches) min.
3. Coplanarity deviation: 0.10 mm (0.004 inches)max.

REV 10