TBI TRANSFORMER BOBBIN INDUSTRIAL CO.,LTD.
Tel : 86-769-88789999 Fax : 86-769-88789989
http:// tbi-tw.com e-mail : tb6688@ms46.hinet.net

REVISIONS

REV	SYM	DRAFTER	CHECKER	DATE
2		Y.G.HSU	S.M.SHIH	01/27/07
3		X.H.GU	G.F.YANG	11/28/07
4		S.Y.TANG	G.F.YANG	12/04/07

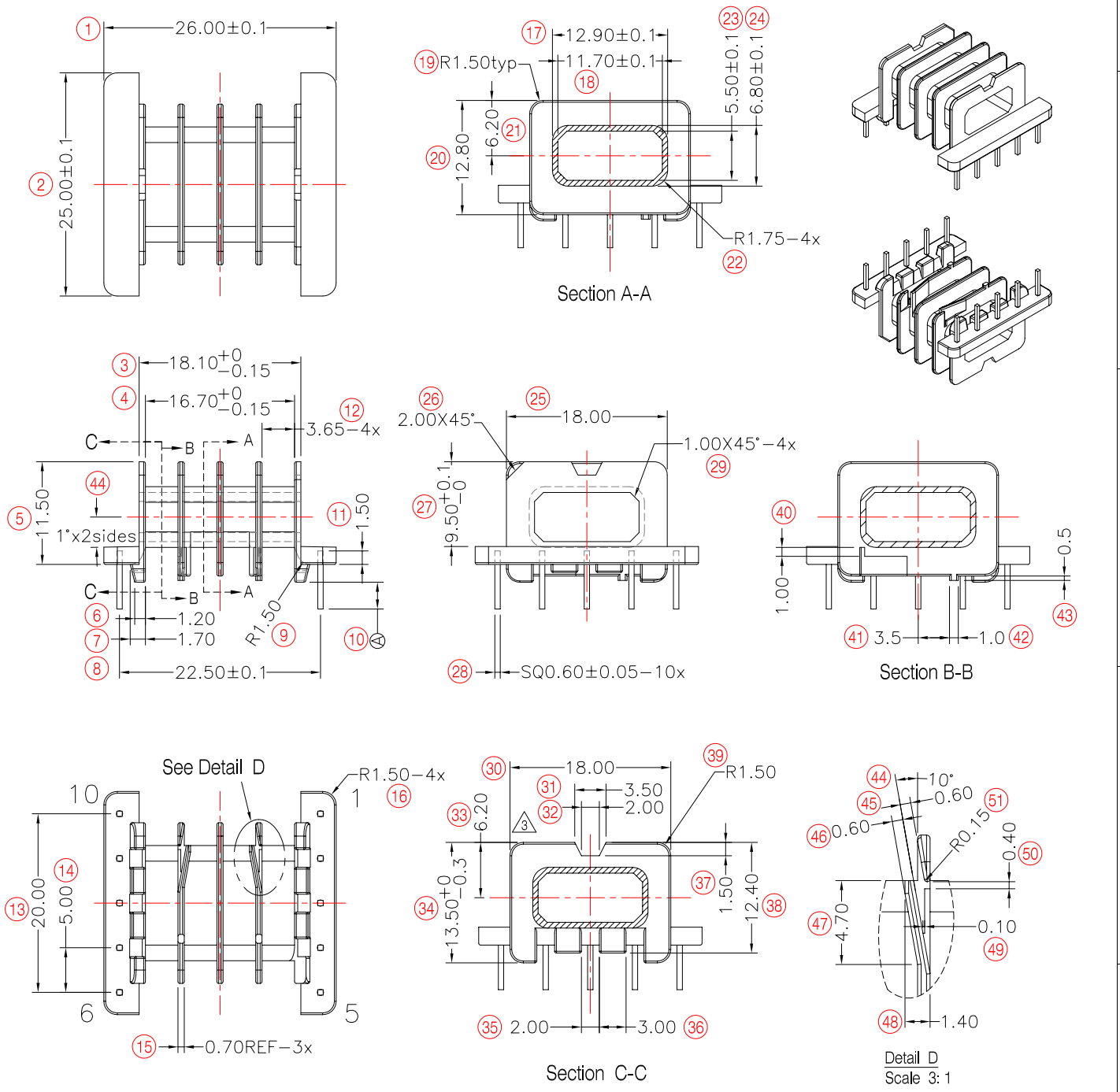

DWG NO.	EFD25-10P-TH-5.0-E-1-4S				
PART NO.	MATERIAL (BOBBIN)	MATERIAL (TERMINAL)	TERMINAL (PLATING)	PIN ALLOCATION	NOTE
TBI-207-02054.106	PM-9630	C.P WIRE	Sn	ALL PIN Ⓐ =3.2±0.2	
2 TBI-207-02054.116	PM-9630	C.P WIRE	Sn	PIN CUT #2,3,4,7,8,9 Ⓐ=3.2±0.2	
3 TBI-207-02054.126	PM-9630	C.P WIRE	Sn	ALL PIN Ⓐ =3.0±0.1	

TOLERANCE: 0~6:±0.1 6~30:±0.20 | UNIT : m / m | SCALE 1.5 : 1

Finish:
1. Pb wire Immersion Sn on terminal : Thickness:Sn plating,100,5 μm (200 μ inches) min,Base nickel 0.625 μm (25 μ inches) min.
2. CP wire Immersion Sn on terminal : Thickness:Sn plating,100,5 μm (200 μ inches) min.
3. Coplanarity deviation: 0.10 mm (0.004 inches)max.

REV 4