TBI TRANSFORMER BOBBIN INDUSTRIAL CO.,LTD.
Tel : 86-769-88789999 Fax : 86-769-88789989
http:// tbi-tw.com e-mail : tb6688@ms46.hinet.net

REVISIONS

REV	SYM	DRAFTER	CHECKER	DATE
1		G.F.YANG	W.H.HSU	02/18/16
2				
3				

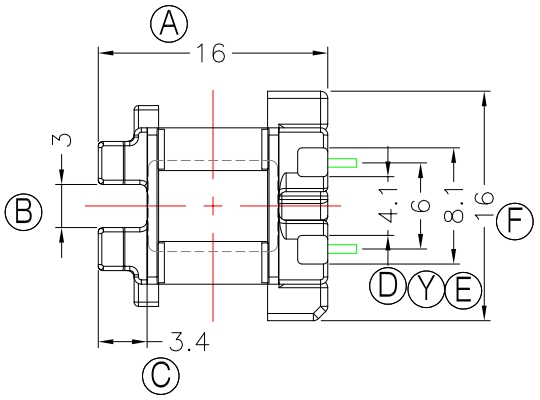

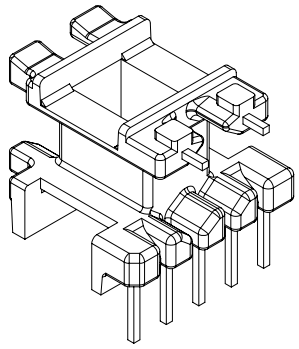

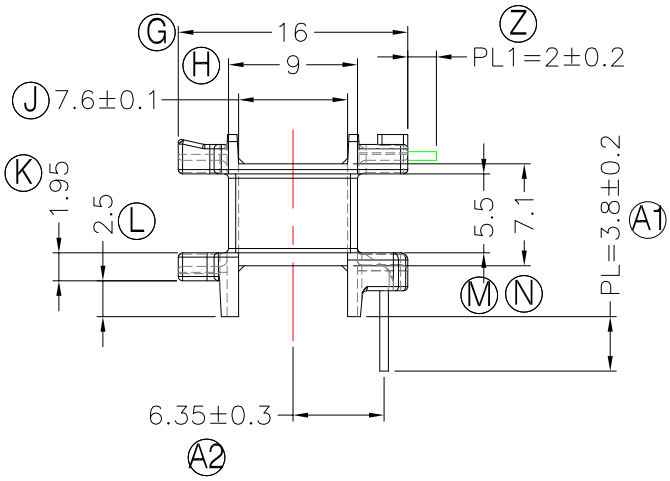

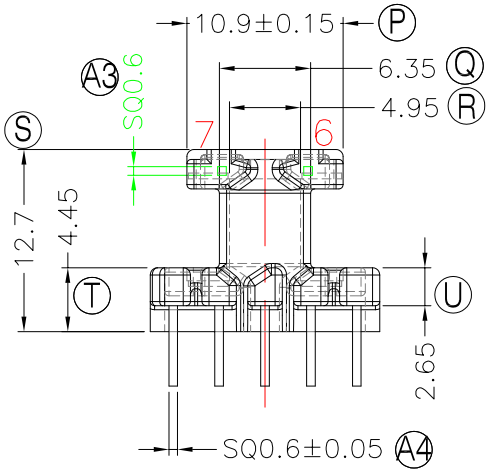

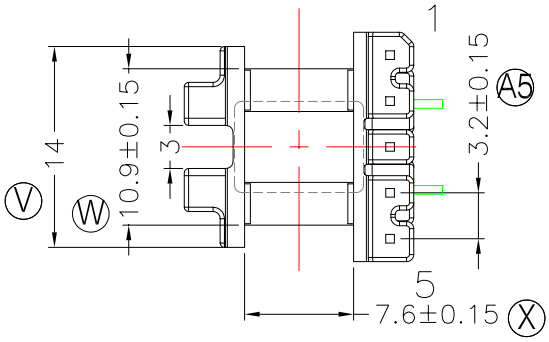

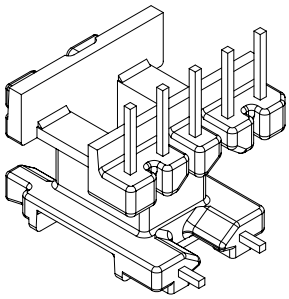

注: 1.任意一點強度須1.5kg MIN;
2.PIN拉力須焊前1.0Kg MIN焊后1.5Kg MIN.

DWG NO.	EE16-7P-TH-B2-17					
PART NO.	MATERIAL (BOBBIN)	MATERIAL (TERMINAL)	TERMINAL (PLATING)	PIN ALLOCATION	NOTE	
TBI-201-09221.1706	PM-9823	CP WIRE	Sn	ALL PIN		S

TOLERANCE:0<L<=4:±0.1 4<L<=16:±0.2 16<L<=63:±0.3 | UNIT : m / m | SCALE 1 : 1

Finish:
1. PB wire Immersion Sn on terminal : Thickness:Sn plating,100%,5μm (200μinches) min,Base nickel 0.625μm (25μ inches) min.
2. CP wire Immersion Sn on terminal : Thickness:Sn plating,100%,5μm (200μinches) min.
3. Coplanarity deviation: 0.10 mm (0.004 inches)max.

REV 1