TBI TRANSFORMER BOBBIN INDUSTRIAL CO.,LTD.
Tel : 86-769-88789999 Fax : 86-769-88789989
http:// tbi-tw.com e-mail : tb6688@ms46.hinet.net

REVISIONS				
REV	SYM	DRAFTER	CHECKER	DATE
1		G.F.YANG	W.H.HSU	05/18/09
2				
3				

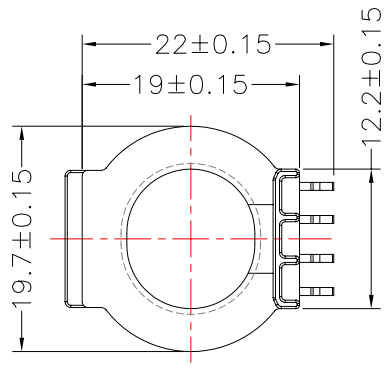

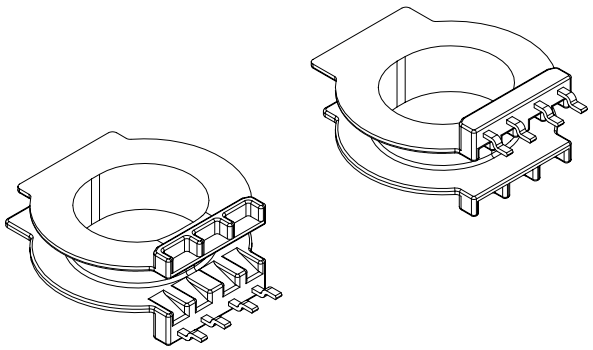

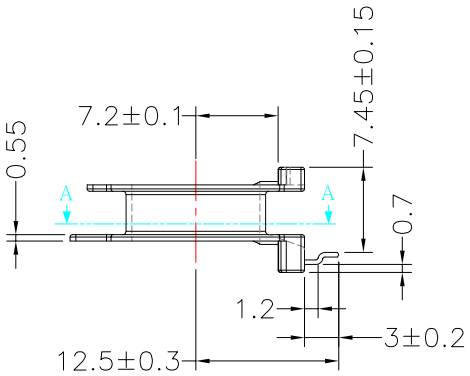

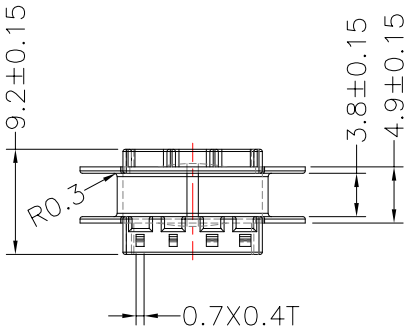

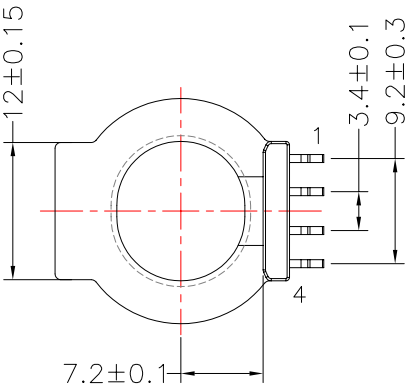

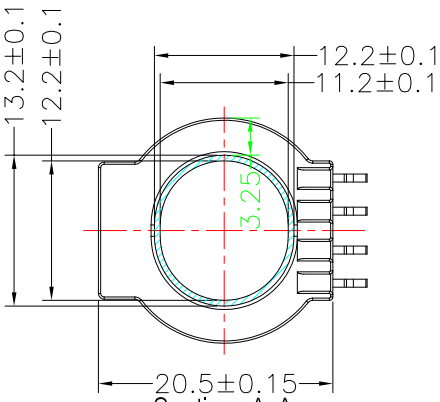

Section A-A

NOTE:
WINDING SPACE: 3.25mm*3.8mm=12.35mm²

DWG NO.	ATQ23.2-10.2-4P-GW-0E-11				
PART NO.	MATERIAL (BOBBIN)	MATERIAL (TERMINAL)	TERMINAL (PLATING)	PIN ALLOCATION	NOTE
TBI-138-06051.1106	PM-9630	CP WIRE	Sn	ALL PIN	

TOLERANCE: .XX±0.1 .XXX±0.05 | UNIT : m / m | SCALE 1 : 1

Finish:
1. PB wire Immersion Sn on terminal : Thickness:Sn plating,100,5 μm (200 μinches) min,Base nickel 0.625 μm (25 μ inches) min.
2. CP wire Immersion Sn on terminal : Thickness:Sn plating,100,5 μm (200 μinches) min.
3. Coplanarity deviation: 0.10 mm (0.004 inches)max.

REV 1