TBI TRANSFORMER BOBBIN INDUSTRIAL CO.,LTD.
Tel : 86-769-88789999 Fax : 86-769-88789989
http:// tbi-tw.com e-mail : tb6688@ms46.hinet.net

REVISIONS				
REV	SYM	DRAFTER	CHECKER	DATE
1		X.X.YUAN	G.F.YANG	04/12/16
2				
3				

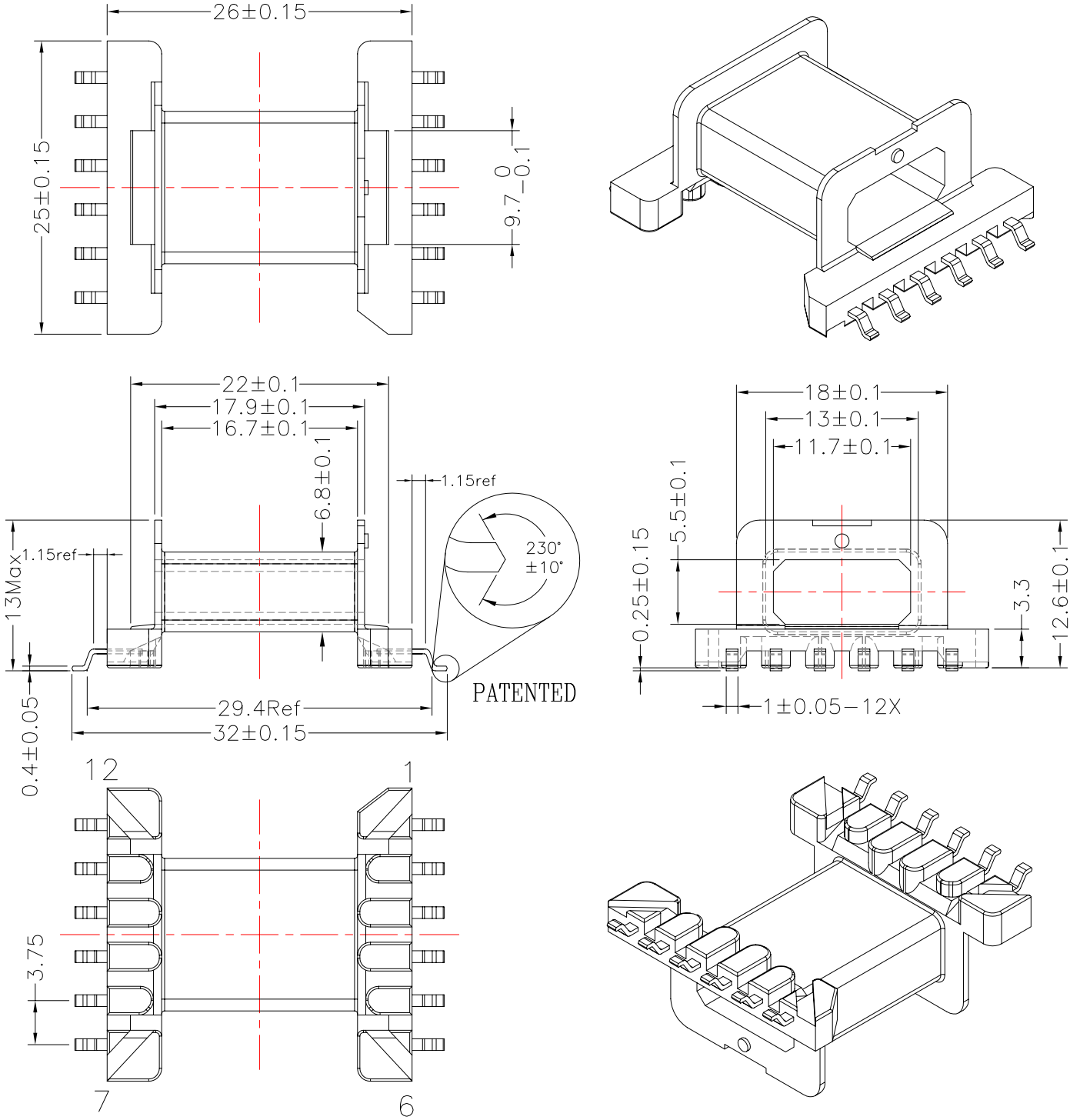

DWG NO.	EFD25-12P-GW-3.75-1G-11					
PART NO.	MATERIAL (BOBBIN)	MATERIAL (TERMINAL)	TERMINAL (PLATING)	PIN ALLOCATION	NOTE	
TBI-107-02211.1103	PM-9630	P.B(C5191)	Sn	ALL PIN		
						H
	TOLERANCE: .X±0.15 .XX±0.10 .XXX±0.05			UNIT : m / m	SCALE 2 : 1	

Finish: 1. PB wire Immersion Sn on terminal : Thickness:Sn plating,100%,5~12.5 μm (200~500 μ inches) min,Base nickel 1.25~2.5 μm (50~100 μ inches) min.
2. CP wire Immersion Sn on terminal : Thickness:Sn plating,100%,5 μm (200 μ inches) min.
3. Coplanarity deviation: 0.10 mm (0.004 inches)max.

REV 1