TBI TRANSFORMER BOBBIN INDUSTRIAL CO.,LTD.
Tel : 86-769-88789999 Fax : 86-769-88789989
http:// tbi-tw.com e-mail : tb6688@ms46.hinet.net

REVISIONS

| REV | SYM | DRAFTER | CHECKER | DATE |
|---|---|---|---|---|
| 1 | | S.Y.TANG | W.H.HSU | 04/06/07 |
| 2 | | | | |
| 3 | | | | |

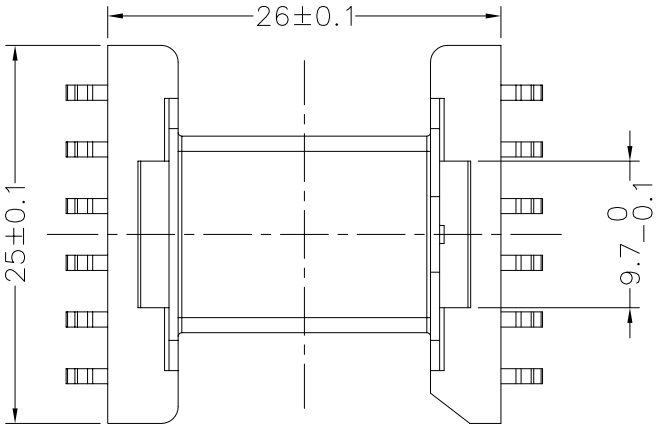


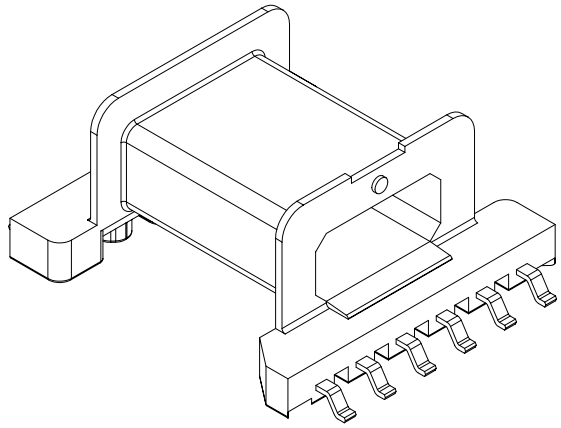

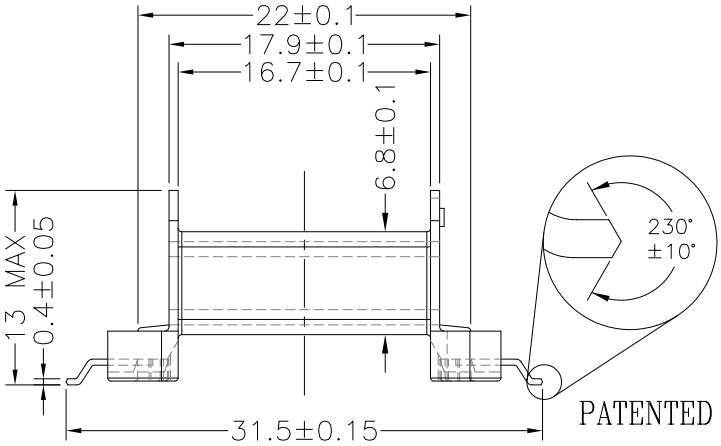


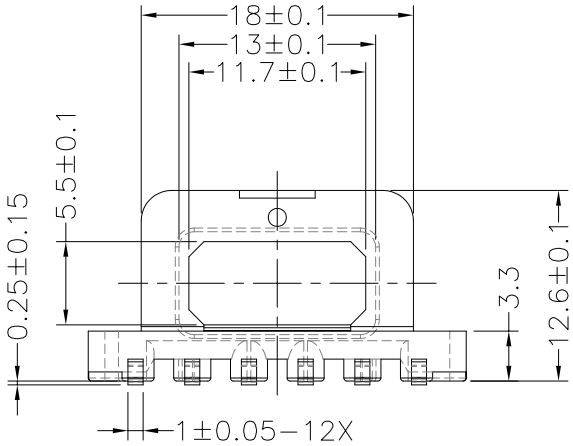


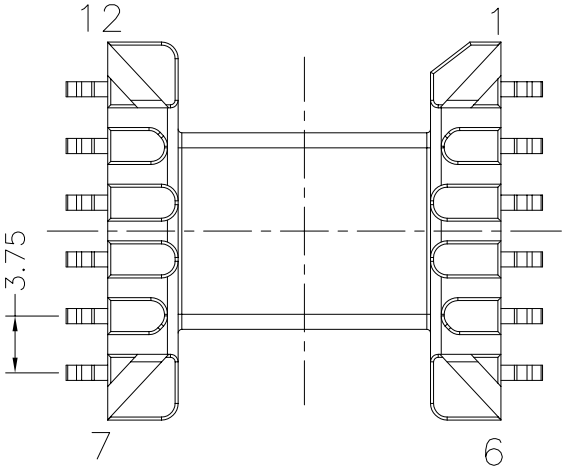


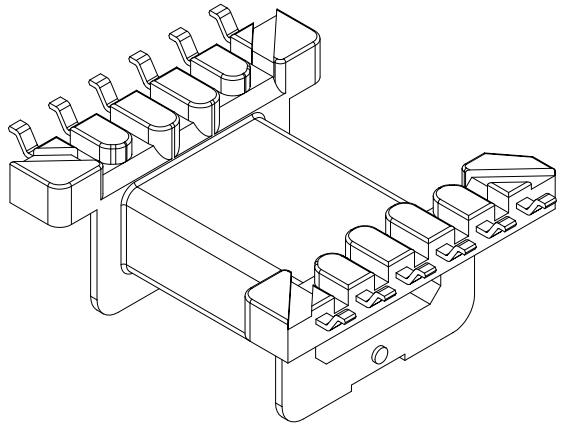

| DWG NO. | EFD25-12P-GW-3.75-0G-2 | | | | |
|---|---|---|---|---|---|
| PART NO. | MATERIAL (BOBBIN) | MATERIAL (TERMINAL) | TERMINAL (PLATING) | PIN ALLOCATION | NOTE |
| TBI-107-02071.203 | AM-113 | P.B | Sn | ALL PIN | |

TOLERANCE: .X±0.15 .XX±0.10 .XXX±0.05 | UNIT : m / m | SCALE 2 : 1

Finish:
1. Pb wire Immersion Sn on terminal : Thickness:Sn plating,100,5 μm (200 μ inches) min,Base nickel 0.625 μm (25 μ inches) min.
2. CP wire Immersion Sn on terminal : Thickness:Sn plating,100,5 μm (200 μ inches) min.
3. Coplanarity deviation: 0.10 mm (0.004 inches )max.

REV 1