TBI TRANSFORMER BOBBIN INDUSTRIAL CO.,LTD.
Tel : 86-769-88789999 Fax : 86-769-88789989
http:// tbi-tw.com e-mail : tb6688@ms46.hinet.net

REVISIONS

REV	SYM	DRAFTER	CHECKER	DATE
1		T.S.LII	W.H.HSU	10/20/04
2		T.S.LII	W.H.HSU	07/24/06
3				

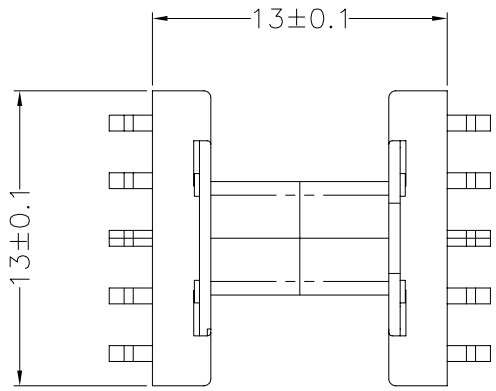

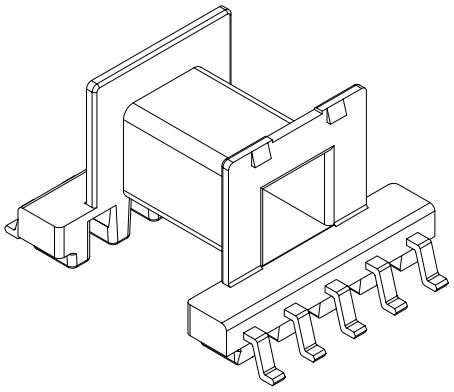

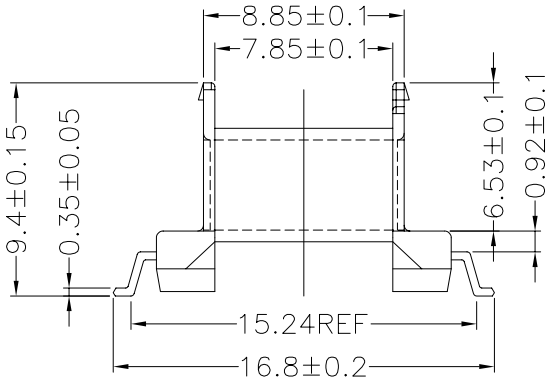

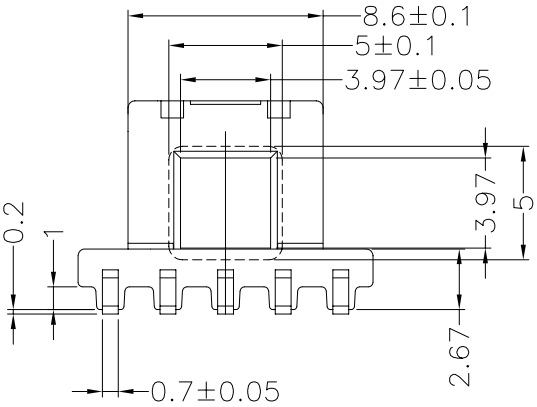

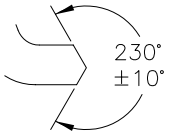

DETAIL : A
(PATENTED)

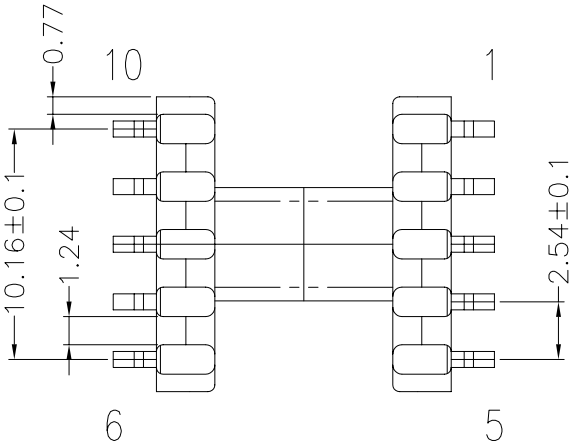

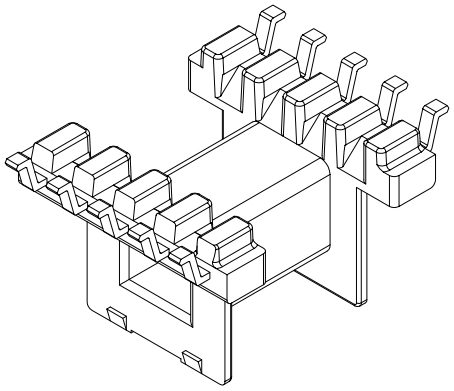

DWG NO.	EF12.6-10P-GW-2.54-E-1				
PART NO.	MATERIAL (BOBBIN)	MATERIAL (TERMINAL)	TERMINAL (PLATING)	PIN ALLOCATION	NOTE
TBI-105-01051.103	PM-9630	P.B	Sn	ALL PIN	

TOLERANCE: .X±0.15 .XX±0.10 .XXX±0.05 | UNIT : m / m | SCALE 3 : 1

Finish:
1. Immersion gold on terminal : Thickness gold 0.075 μm (3 μ inches) min,Base nickel 0.625 μm (25 μ inches) min.
2. Immersion Sn on terminal : Terminal:Sn plating,100, 5 μm (200 μ inches) min , Base nickel 0.625 μm (25 μ inches) min.
3. Coplanarity deviation: 0.10 mm (0.004 inches)max.

REV 2