TBI TRANSFORMER BOBBIN INDUSTRIAL CO.,LTD.
Tel : 86-769-88789999 Fax : 86-769-88789989
http:// tbi-tw.com e-mail : tb6688@ms46.hinet.net

REVISIONS

REV	SYM	DRAFTER	CHECKER	DATE
1		Y.G.HSU	W.H.HUS	05/31/07
2		S.Y.TANG	W.H.HUS	07/18/07
3		S.Y.TANG	W.H.HUS	09/13/07

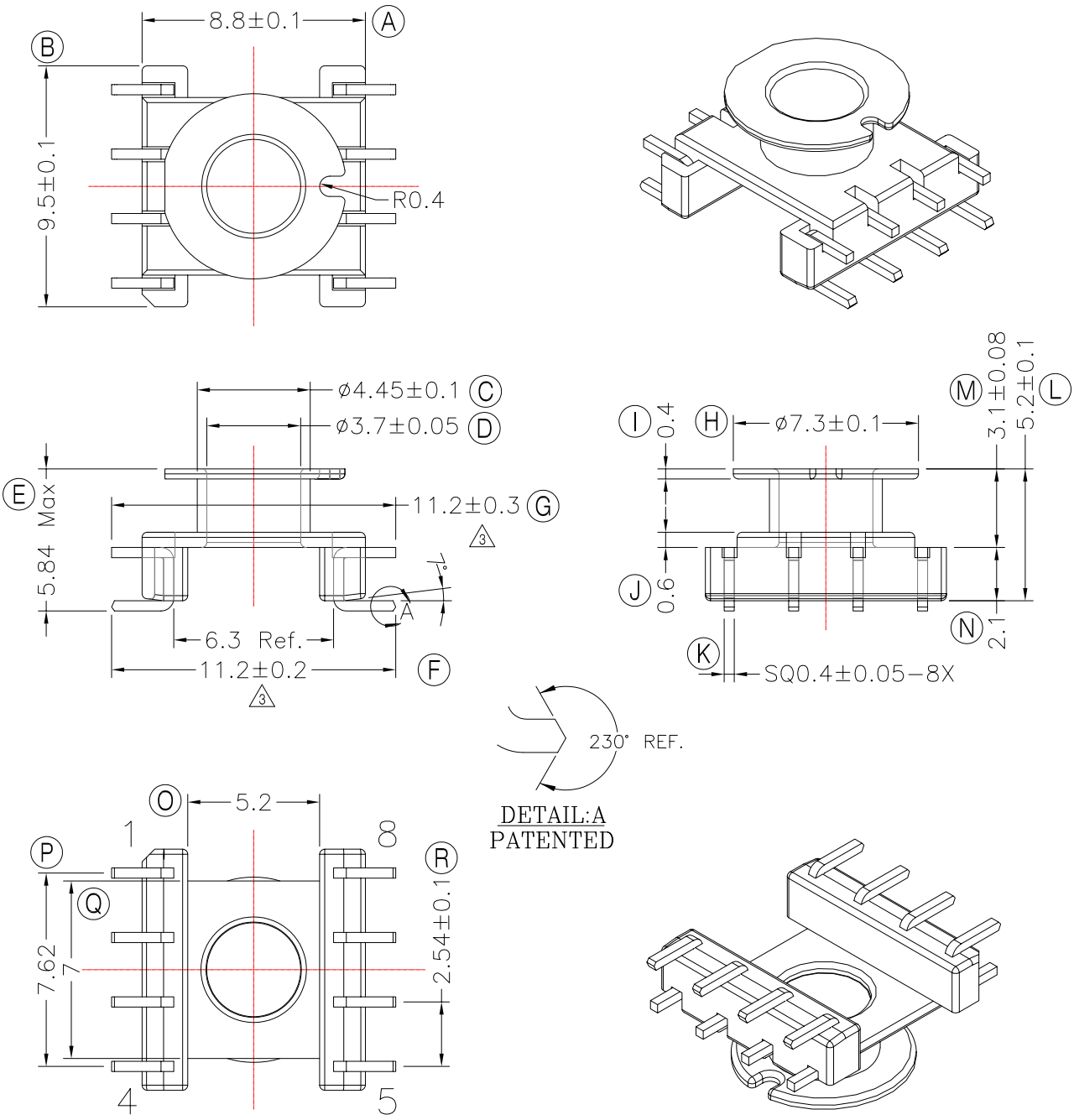

DWG NO.	ER9.5-8P-J-2.54-F-1				
PART NO.	MATERIAL (BOBBIN)	MATERIAL (TERMINAL)	TERMINAL (PLATING)	PIN ALLOCATION	NOTE
TBI-104-03061.103	PM-9630	P.B	Sn	ALL PIN	
	TOLERANCE: .X±0.15 .XX±0.10 .XXX±0.05			UNIT : m / m	SCALE 4 : 1

Finish:
1. Pb wire Immersion Sn on terminal : Thickness:Sn plating,100,5 μm (200 μ inches) min,Base nickel 0.625 μm (25 μ inches) min.
2. CP wire Immersion Sn on terminal : Thickness:Sn plating,100,5 μm (200 μ inches) min.
3. Coplanarity deviation: 0.10 mm (0.004 inches)max.

REV 3