TBI TRANSFORMER BOBBIN INDUSTRIAL CO.,LTD.
Tel : 86-769-88789999 Fax : 86-769-88789989
http:// tbi-tw.com e-mail : tb6688@ms46.hinet.net

REVISIONS				
REV	SYM	DRAFTER	CHECKER	DATE
1		S.Y.TANG	W.H.HSU	06/21/07
2				
3				

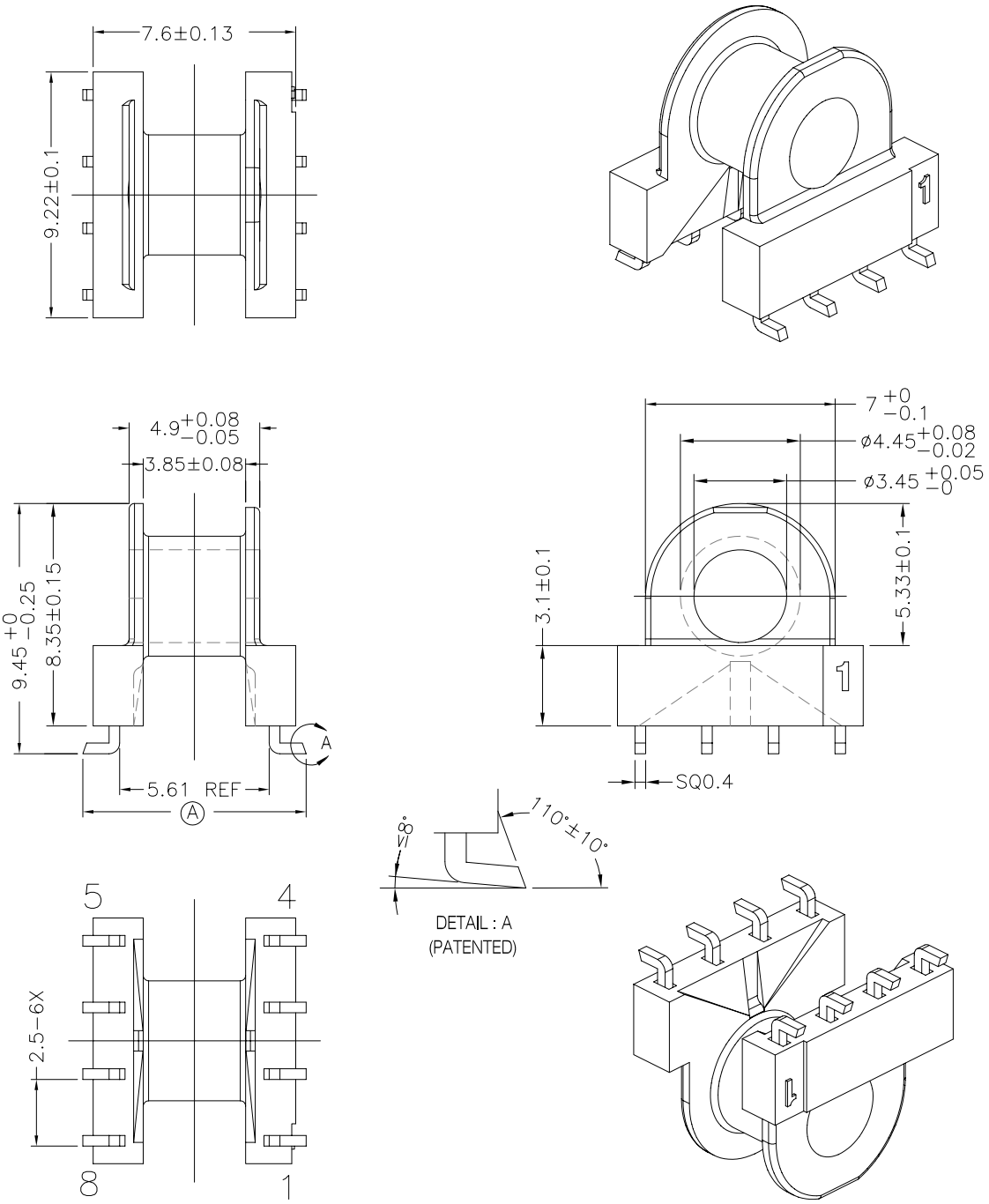

DWG NO.	EP7-8P-L-2.5V-A6-2				
PART NO.	MATERIAL (BOBBIN)	MATERIAL (TERMINAL)	TERMINAL (PLATING)	PIN ALLOCATION	NOTE
TBI-103-08161.203	AM-113	P.B	Sn	ALL PIN (A)=8.65±0.15	
TBI-103-08161.213	AM-113	P.B	Sn	ALL PIN (A)=8.15±0.15	
TBI-103-08161.223	AM-113	P.B	Sn	ALL PIN (A)=8.15 +0.15 −0.05	
	TOLERANCE: .X±0.15 .XX±0.10 .XXX±0.05			UNIT : m / m	SCALE 4 : 1

Finish:
1. Pb wire Immersion Sn on terminal : Thickness:Sn plating,100,5 μm (200 μ inches) min,Base nickel 0.625 μm (25 μ inches) min.
2. CP wire Immersion Sn on terminal : Thickness:Sn plating,100,5 μm (200 μ inches) min.
3. Coplanarity deviation: 0.10 mm (0.004 inches)max.
4.Pin pull strenght = 1.0 kg (min) .

REV 1