TBI TRANSFORMER BOBBIN INDUSTRIAL CO.,LTD.
Tel : 86-769-88789999 Fax : 86-769-88789989
http:// tbi-tw.com e-mail : tb6688@ms46.hinet.net

REVISIONS

| REV | SYM | DRAFTER | CHECKER | DATE |
|---|---|---|---|---|
| 3 | | T.S.LII | W.H.HSU | 06/05/03 |
| 4 | | T.S.LII | W.H.HSU | 07/24/06 |
| 5 | | X.H.GU | G.F.YANG | 06/14/11 |

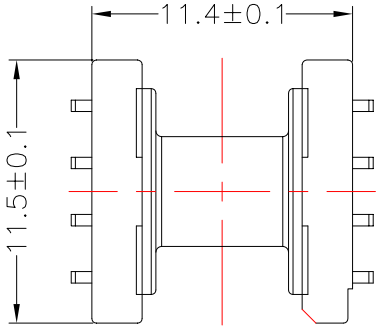


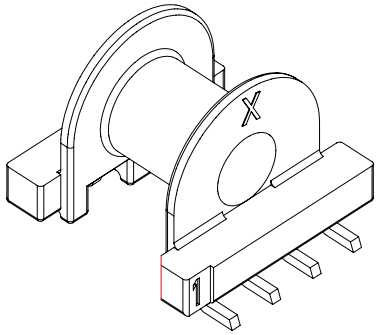


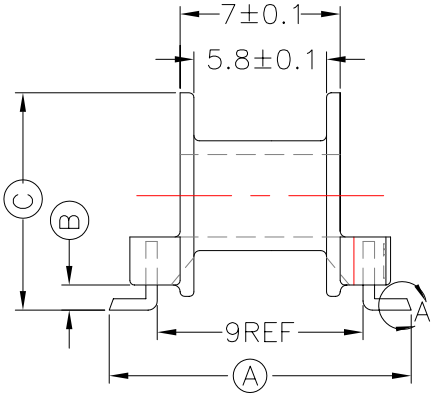


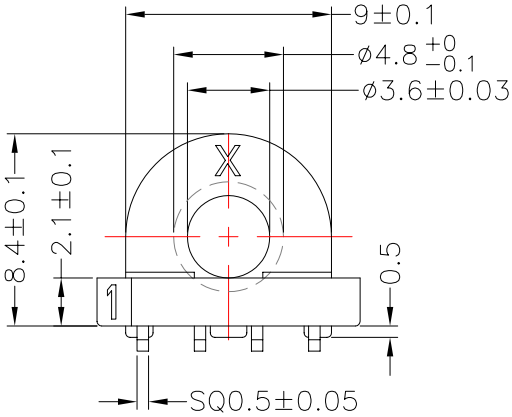


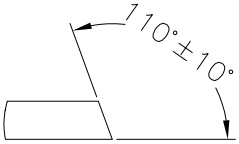


DETAIL A−10:1
(PATENTED)

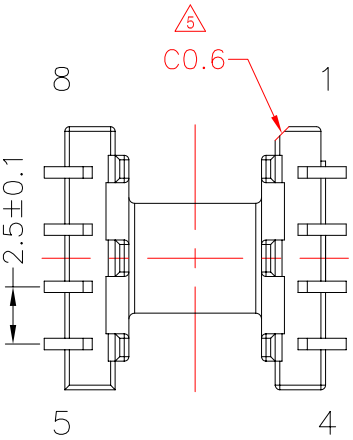


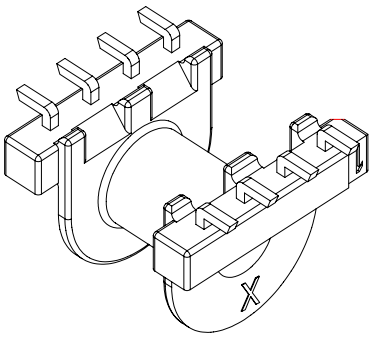


NOTE: 拉力1.0Kg MIN;

| DWG NO. | EP10-8P-L-2.5-E-1 | | | | | |
|---|---|---|---|---|---|---|
| PART NO. | MATERIAL (BOBBIN) | MATERIAL (TERMINAL) | TERMINAL(PLATING) | PIN ALLOCATION | NOTE | |
| TBI-103-02051.103 | PM-9630 | P.B(C5191) | Sn | ALL PIN Ⓐ=13.2±0.2 Ⓑ=1.1±0.15 Ⓒ=9.5±0.15 | | |
| TBI-103-02051.113 | PM-9630 | P.B(C5191) | Sn | ALL PIN Ⓐ=14.6±0.2 Ⓑ=2.1±0.15 Ⓒ=10.5±0.15 | | H |

TOLERANCE: .X±0.15 .XX±0.10 .XXX±0.05 UNIT : m / m SCALE 33::11

Finish:
1. PB wire Immersion Sn on terminal : Thickness:Sn plating,100,5 μm (200 μinches) min,Base nickel 0.625 μm (25 μ inches) min.
2. CP wire Immersion Sn on terminal : Thickness:Sn plating,100,5 μm (200 μinches) min.
3. Coplanarity deviation: 0.10 mm (0.004 inches )max.

REV 5