TBI TRANSFORMER BOBBIN INDUSTRIAL CO.,LTD.
Tel : 86-769-88789999 Fax : 86-769-88789989
http:// tbi-tw.com e-mail : tb6688@ms46.hinet.net

REVISIONS

REV	SYM	DRAFTER	CHECKER	DATE
2		T.S.LII	W.H.HSU	06/01/03
3		T.S.LII	W.H.HSU	07/24/06
4		T.S.LII	W.H.HSU	04/02/07

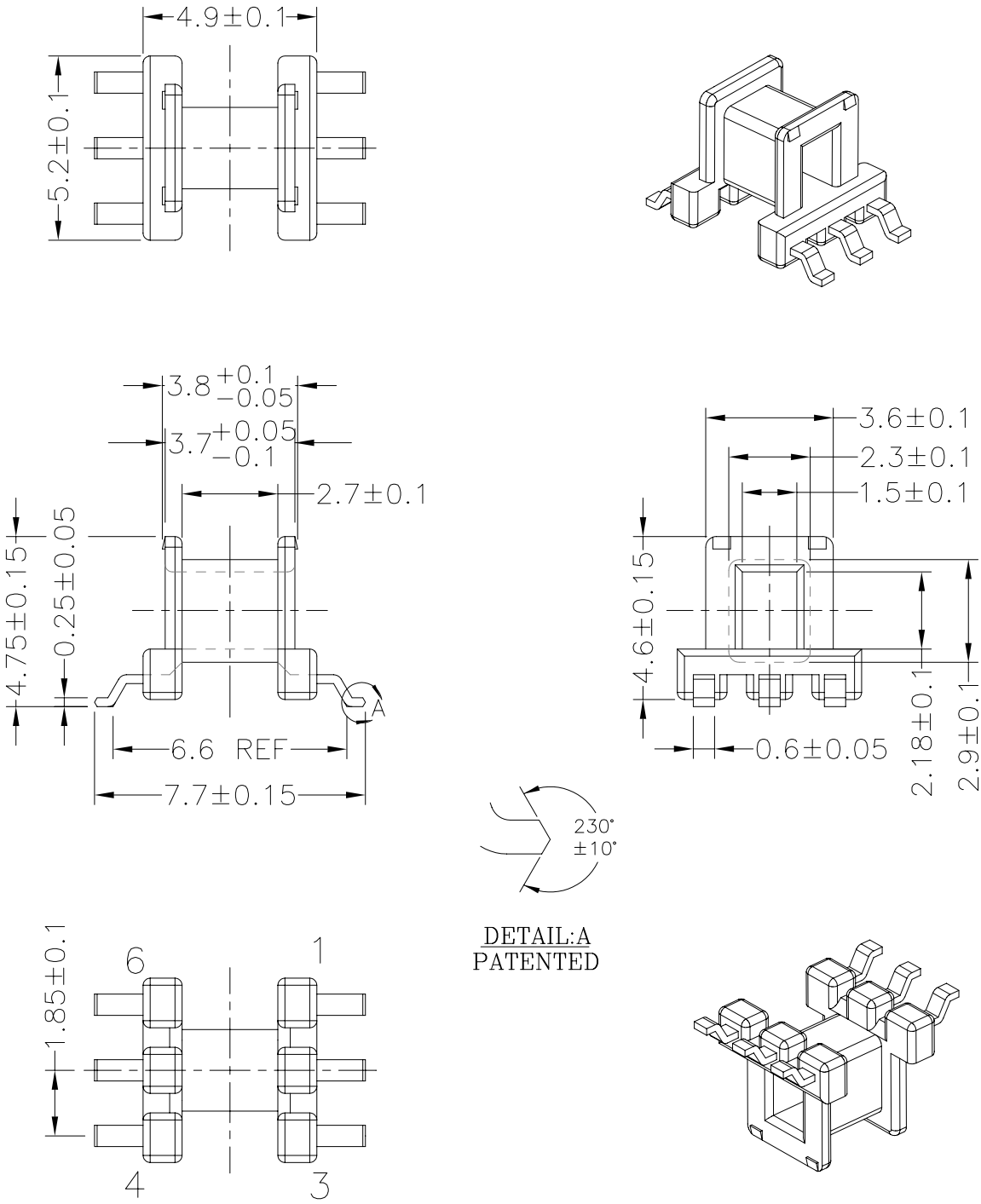

DWG NO.	EE5.0-6P-GW-1.85-C-1				
PART NO.	MATERIAL (BOBBIN)	MATERIAL (TERMINAL)	TERMINAL (PLATING)	PIN ALLOCATION	NOTE
TBI-101-01031.103	PM-9630	P.B	Sn	ALL PIN	

TOLERANCE: .X±0.15 .XX±0.10 .XXX±0.05 | UNIT : m / m | SCALE 5.5 : 1

Finish:
1. Pb wire Immersion Sn on terminal : Thickness:Sn plating,100,5 μm (200 μ inches) min,Base nickel 0.625 μm (25 μ inches) min.
2. CP wire Immersion Sn on terminal : Thickness:Sn plating,100,5 μm (200 μ inches) min.
3. Coplanarity deviation: 0.10 mm (0.004 inches)max.

REV 4