TBI TRANSFORMER BOBBIN INDUSTRIAL CO.,LTD.
Tel : 86-769-88789999 Fax : 86-769-88789989
http:// tbi-tw.com e-mail : tb6688@ms46.hinet.net

REVISIONS				
REV	SYM	DRAFTER	CHECKER	DATE
2		T.S.LII	W.H.HSU	03/17/03
3		T.S.LII	W.H.HSU	06/01/03
4		T.S.LII	W.H.HSU	07/24/06

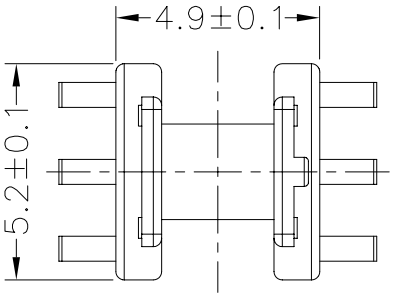

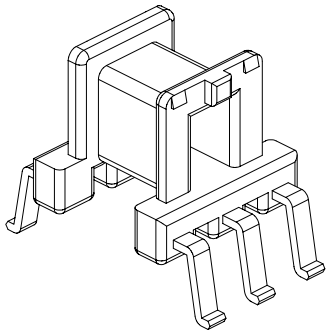

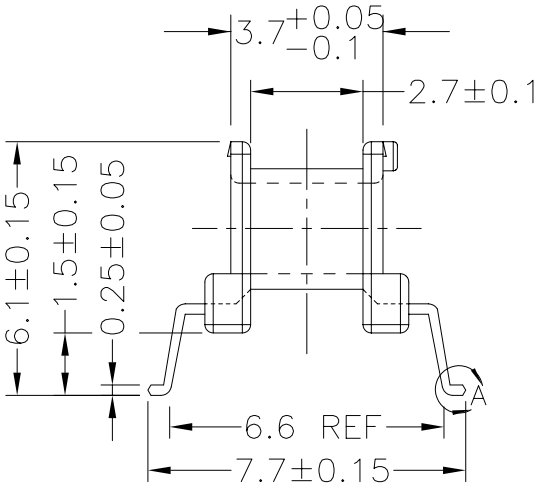

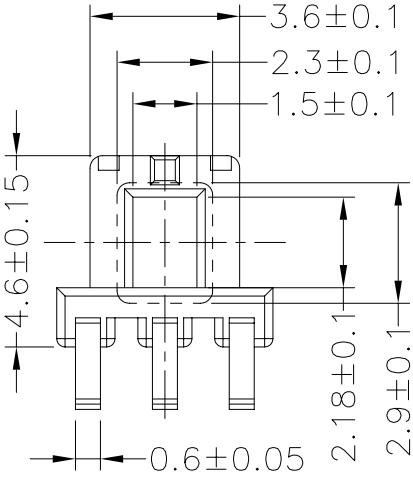

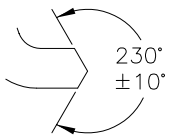

DETAIL:A
PATENTED

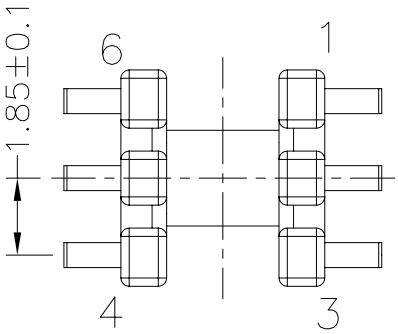

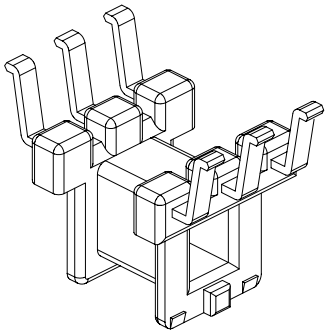

DWG NO.	EE5.0-6P-GW-1.85-H-B-1				
PART NO.	MATERIAL (BOBBIN)	MATERIAL (TERMINAL)	TERMINAL (PLATING)	PIN ALLOCATION	NOTE
TBI-101-01021.103	PM-9630	P.B	Sn	ALL PIN	
TBI-101-01021.113	PM-9630	P.B	Sn	Pin cut No.2 , 5	

TOLERANCE: .X±0.15 .XX±0.10 .XXX±0.05 | UNIT : m / m | SCALE 5.5 : 1

Finish:
1. Immersion gold on terminal : Thickness gold 0.075 μm (3 μ inches) min,Base nickel 0.625 μm (25 μ inches) min.
2. Immersion Sn on terminal : Terminal:Sn plating,100, 5 μm (200 μ inches) min , Base nickel 0.625 μm (25 μ inches) min.
3. Coplanarity deviation: 0.10 mm (0.004 inches)max.

REV 4