TBI TRANSFORMER BOBBIN INDUSTRIAL CO.,LTD.
Tel : 86-769-88789999 Fax : 86-769-88789989
http:// tbi-tw.com e-mail : tb6688@ms46.hinet.net

| REVISIONS | | | | |
|---|---|---|---|---|
| REV | SYM | DRAFTER | CHECKER | DATE |
| 1 | | X.H.GU | G.F.YANG | 07/31/14 |
| 2 | | | | |
| 3 | | | | |

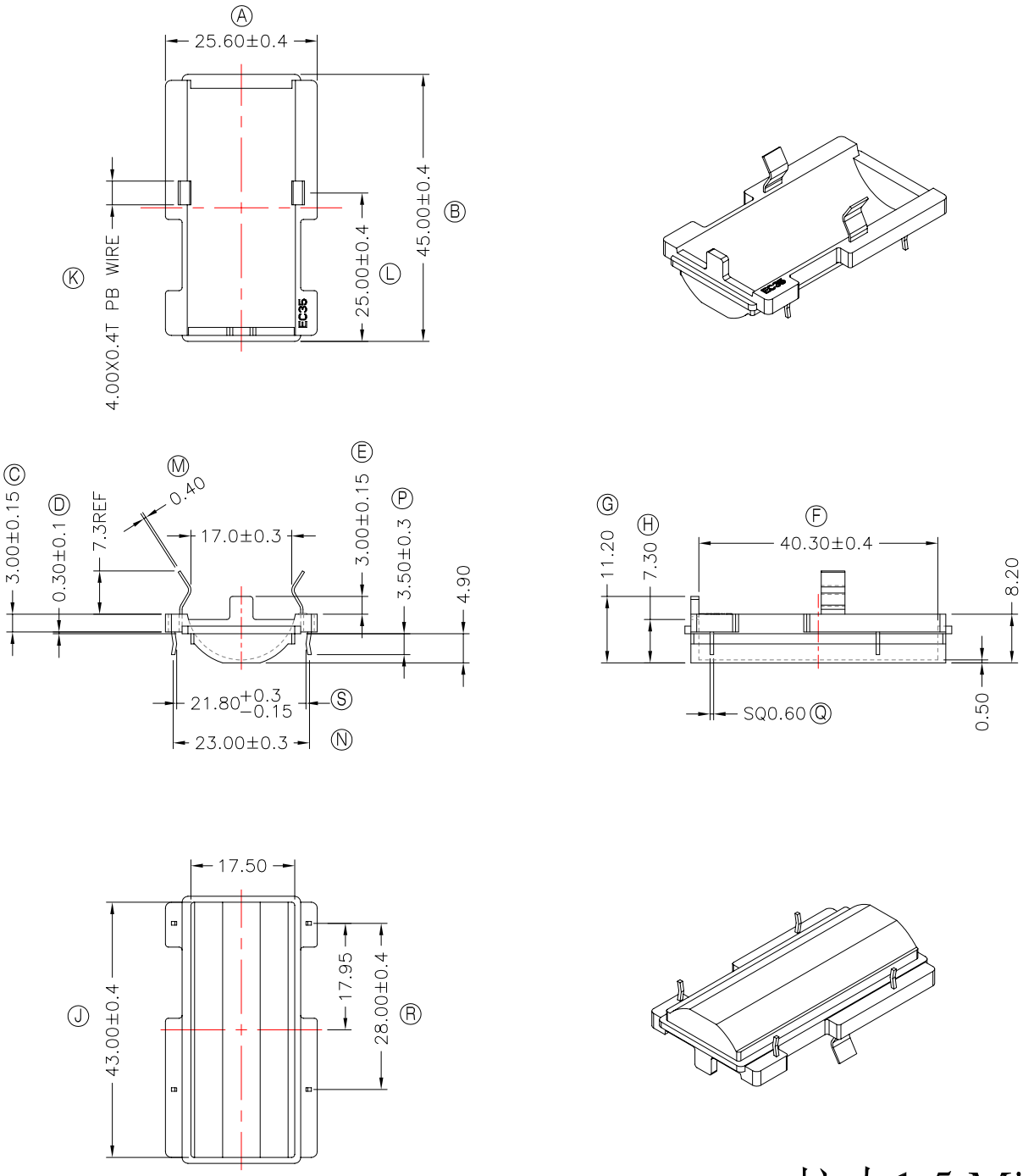


拉力1.5 Min

| DWG NO. | EC35CAP-A2-12 | | | | | |
|---|---|---|---|---|---|---|
| PART NO. | MATERIAL (BOBBIN) | MATERIAL (TERMINAL) | TERMINAL (PLATING) | PIN ALLOCATION | NOTE | |
| TBI-220-40121.1206 | PM-9820 | CP WIRE | Sn | ALL PIN | | S |
| | | | | | | H |

TOLERANCE:0<L<=4:±0.1 4<L<=16:±0.2 16<L<=63:±0.3 | UNIT : m / m | SCALE 1 : 1

Finish:
1. PB wire Immersion Sn on terminal : Thickness:Sn plating,100%,5 μm (200 μ inches) min,Base nickel 0.625 μm (25 μ inches) min.
2. CP wire Immersion Sn on terminal : Thickness:Sn plating,100%,5 μm (200 μ inches) min.
3. Coplanarity deviation: 0.10 mm (0.004 inches )max.

REV 1