TBI TRANSFORMER BOBBIN INDUSTRIAL CO.,LTD.
Tel : 86-769-88789999 Fax : 86-769-88789989
http:// tbi-tw.com e-mail : tb6688@ms46.hinet.net

| REVISIONS | | | | |
|---|---|---|---|---|
| REV | SYM | DRAFTER | CHECKER | DATE |
| 1 | | G.F.YANG | W.H.HSU | 06/16/14 |
| 2 | | | | |
| 3 | | | | |

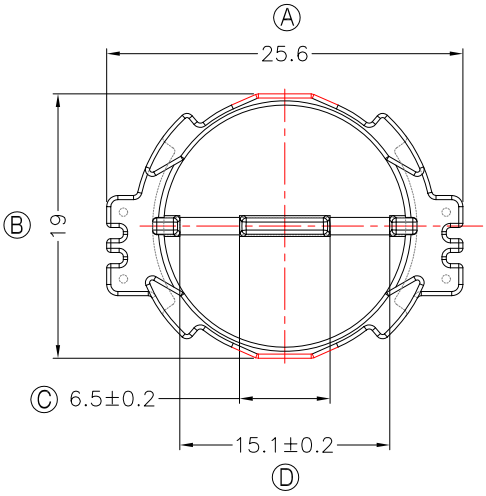


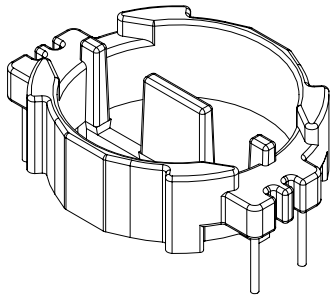

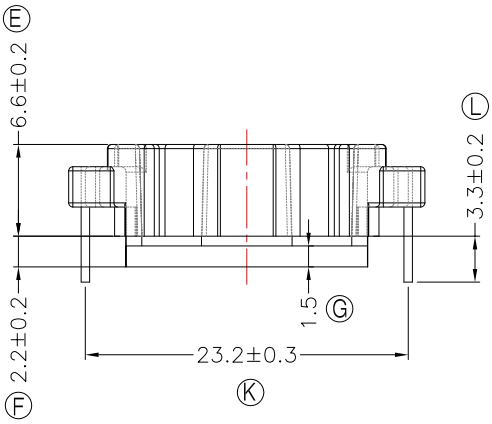


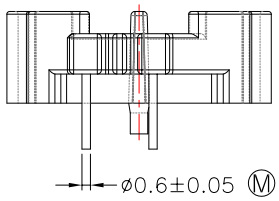


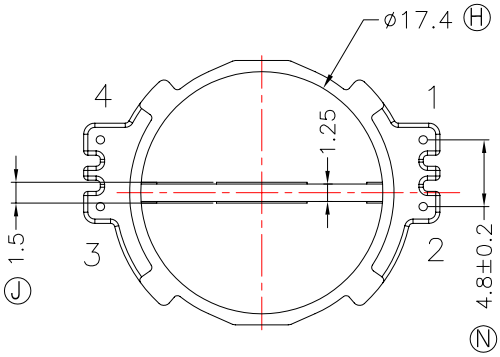


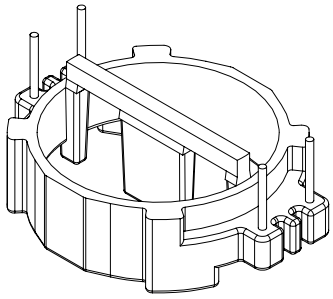

| DWG NO. | OR14X8-4P-BASE-C8-12 | | | | | |
|---|---|---|---|---|---|---|
| PART NO. | MATERIAL (BOBBIN) | MATERIAL (TERMINAL) | TERMINAL (PLATING) | PIN ALLOCATION | NOTE | |
| TBI-220-16381.1206 | PM-9820(BK) | CP WIRE | Sn | ALL PIN | | S |
| | | | | | | |
| | | | | | | |
| | | | | | | |
| | | | | | | |
| | | | | | | |
| | TOLERANCE:0<L<=4:±0.1 4<L<=16:±0.2 16<L<=63:±0.3 | | | UNIT : m / m | SCALE 1 : 1 | |

Finish:
1. PB wire Immersion Sn on terminal : Thickness:Sn plating,100,5 μm (200 μinches) min,Base nickel 0.625 μm (25 μ inches) min.
2. CP wire Immersion Sn on terminal : Thickness:Sn plating,100,5 μm (200 μinches) min.
3. Coplanarity deviation: 0.10 mm (0.004 inches )max.

REV 1