TBI
TRANSFORMER BOBBIN INDUSTRIAL CO.,LTD.
Tel : 86-769-88789999 Fax : 86-769-88789989
http:// tbi-tw.com e-mail : tb6688@ms46.hinet.net

REVISIONS

REV	SYM	DRAFTER	CHECKER	DATE
3		X.H.GU	G.F.YANG	05/14/14
4		X.H.GU	G.F.YANG	08/07/14
5		X.H.GU	G.F.YANG	12/29/15

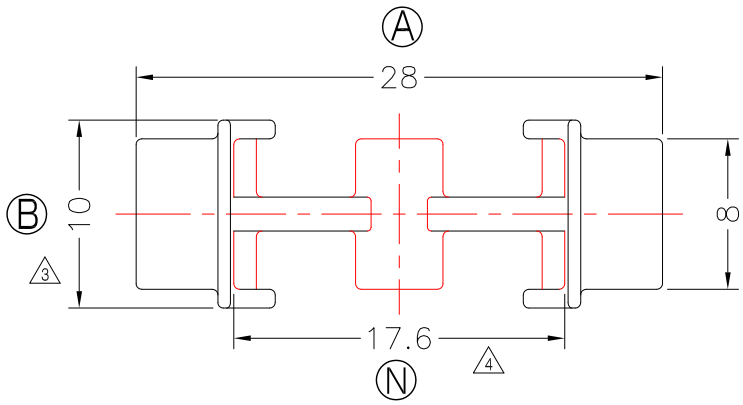

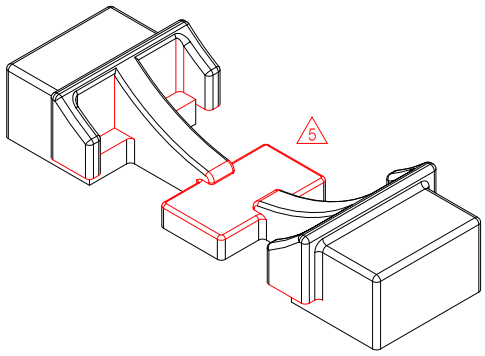

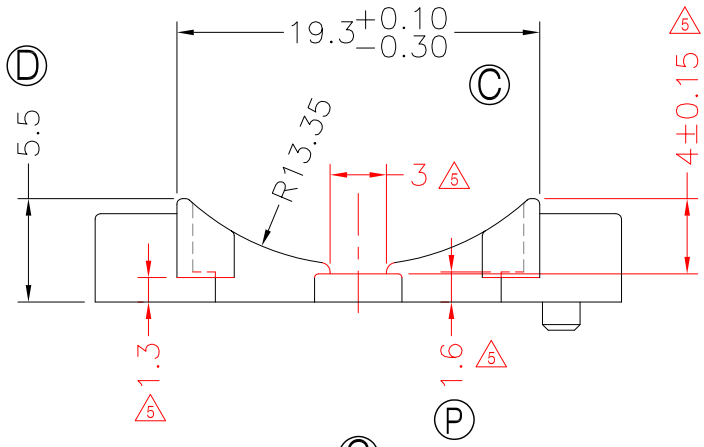

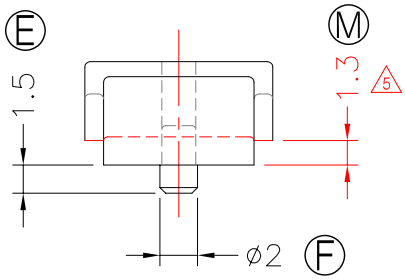

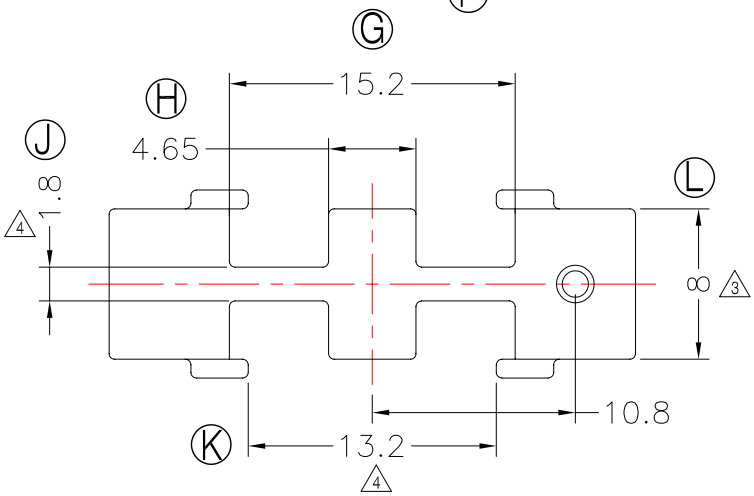

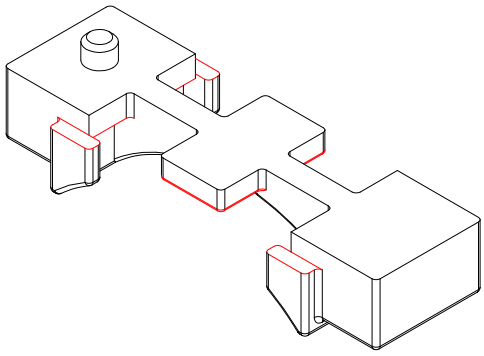

任意一點強度須1.5kg MIN;

DWG NO.	B28X8-NA-C5-12					
PART NO.	MATERIAL (BOBBIN)	MATERIAL (TERMINAL)	TERMINAL (PLATING)	PIN ALLOCATION	NOTE	
TBI-129-03351.12	PM-9820(BK)	NA	NA	NA		S
						H

TOLERANCE: 0<L<=4:±0.1 4<L<=16:±0.2 16<L<=63:±0.3 | UNIT : m / m | SCALE 1 :1

Finish:
1. PB wire Immersion Sn on terminal : Thickness:Sn plating,100%,5 μm (200 μ inches) min,Base nickel 0.625 μm (25 μ inches) min.
2. CP wire Immersion Sn on terminal : Thickness:Sn plating,100%,5 μm (200 μ inches) min.
3. Coplanarity deviation: 0.10 mm (0.004 inches)max.

REV 5